STROMBERG-CARLSON SERVICE NOTES

AC-DC RADIO RECEIVER NO. 1101

SERIES NOS. 10—11

IDENTIFICATION TABLE

MODEL	CHASSIS	CABINET	SPEAKER	
			SERIES 10-12	SERIES 11-13
1101—HB Br. Bakelite	112002	108031	155001	155013
1101—HI lv. Bakelite	112002	108032	155001	155013
1101—HM Mahogany	112003	108011	155001	155013
1101—HW Walnut	112001	108001	155001	155013
1101—HY Bleached	112001	108002	155001	155013

SPECIFICATIONS

Voltage Rating.....105-125 Volts
Type of Circuit.....Superheterodyne
Tuning Range.....540 Kc. to 1600 Kc.
Number and type of Tubes—6
- 1—12SK7.....R.F. Amplifier
- 1—12SA7.....Converter
- 1—12SK7.....I.F. Amplifier
- 1—12SQ7.....Demodulator, A.V.C., 1st Audio
- 1—35L6GT.....Power Output
- 1—35Z5GT.....Rectifier

Input Power Rating.....50 Watts
Input Power Frequency.....25-60 Cycles AC-DC
Intermediate Frequency.....455 Kc.
Speaker Voice Coil Impedance.....at 400 Cycles 3.5 Ohms
Speaker Field Coil Resistance.....425 Ohms
Power Output.....0.65 Watts

ALIGNING

Never realign unless absolutely necessary

Use a good signal generator modulated at 400 or 1000 cycles with variable output voltage and a sensitive output meter across the voice coil of the speaker.

Always align using the smallest possible input from the signal generator. *A strong signal makes adjustments approximate.*

Always have the volume control "full on."

Aligning Procedure *(follow this order exactly)*

Intermediate Frequency Adjustments

1. Turn the tuning control to the extreme low frequency position. (Variable capacitor plates all the way in).
2. Connect the ground terminal of the signal generator to the common buss. (Black and White wire).
3. Introduce a modulated signal of 455 kilocycles using a .01 mfd. capacitor in series with the lead from the signal generator to the modulator grid, terminal No. 8, of the 12SA7 tube.
4. Adjust the I.F. Aligners for maximum output in the following order:
   - A. Secondary of second I.F. Transformer.
   - B. Primary of second I.F. Transformer.
   - C. Secondary of first I.F. Transformer.
   - D. Primary of first I.F. Transformer.

Dial Pointer Adjustments

1. Disconnect the .01 mfd. capacitor in series with the signal generator, disconnect signal generator ground from black and white buss. Connect both signal generator lead and ground lead to an 8 inch radiating loop. *(1 turn.)* Place the radiating loop close to the antenna of the receiver.
2. Turn the plates of the gang tuning capacitor full out *(complete clockwise rotation).*
3. Set signal generator to 1580 kilocycles and adjust oscillator trimmer for maximum output. Now set signal generator to 1400 kilocycles and tune set to receive this signal. Adjust pointer to center of 1400 kilocycle calibration on dial.

Radio Frequency Adjustments

1. Leave signal generator loop connected in same position as for dial pointer adjustment.
2. Set signal generator and receiver tuning dial to 1400 kilocycles.
3. Adjust the oscillator, radio frequency and antenna trimmers for maximum output.
4. Set both the signal generator's frequency and the receiver's tuning dial to 600 kilocycles and check calibration.

Note: If the calibration is off at 600 kilocycles, operations 2 and 3 may be repeated until the best results are obtained.

THE EXCLUSIVE STROMBERG-CARLSON COLOR CODE SCHEMATIC

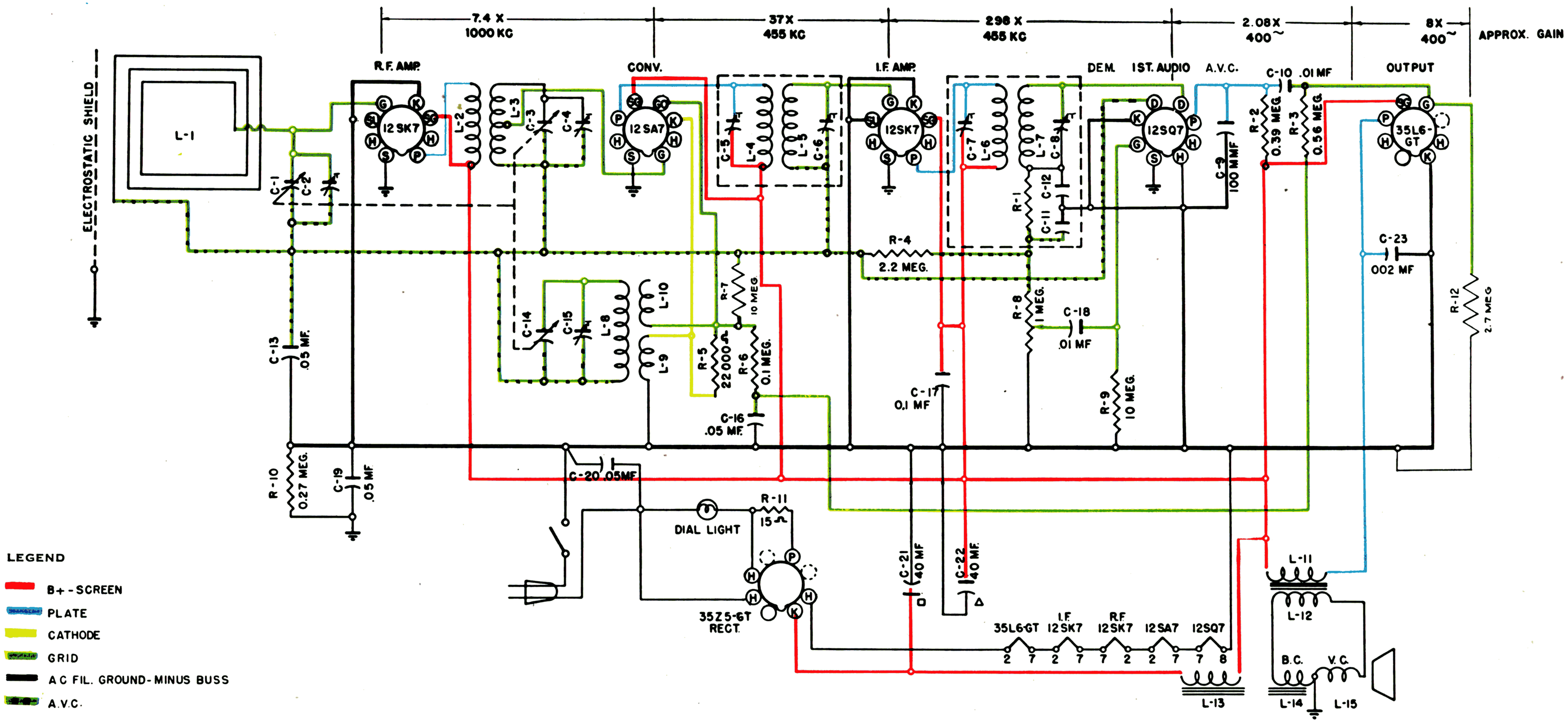

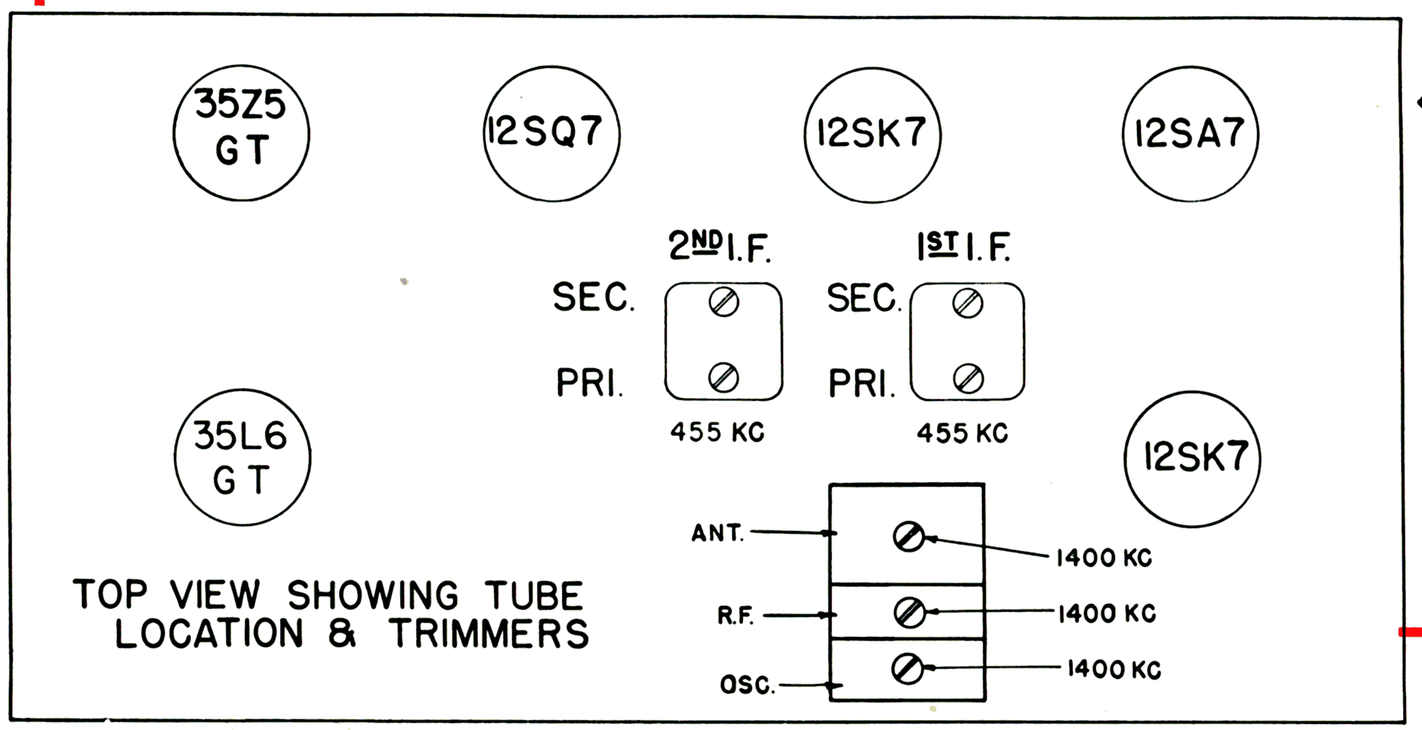

Tube and Trimmer Chart

Voltage Chart

Measurements are made at 117 volt line, using electronic voltmeter.

Except where otherwise indicated, voltages are D.C. and are positive with respect to the reference point which is the minus B or neutral buss, black and white wire.

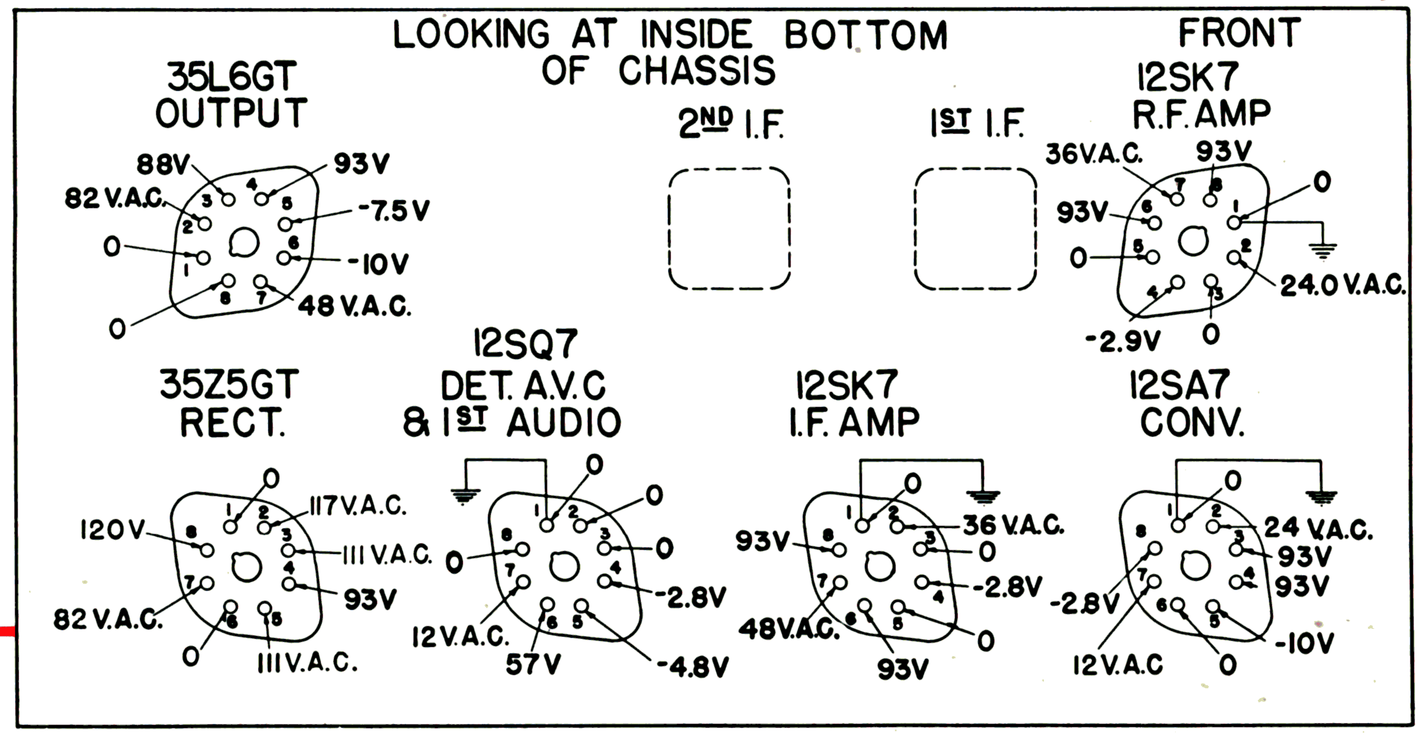

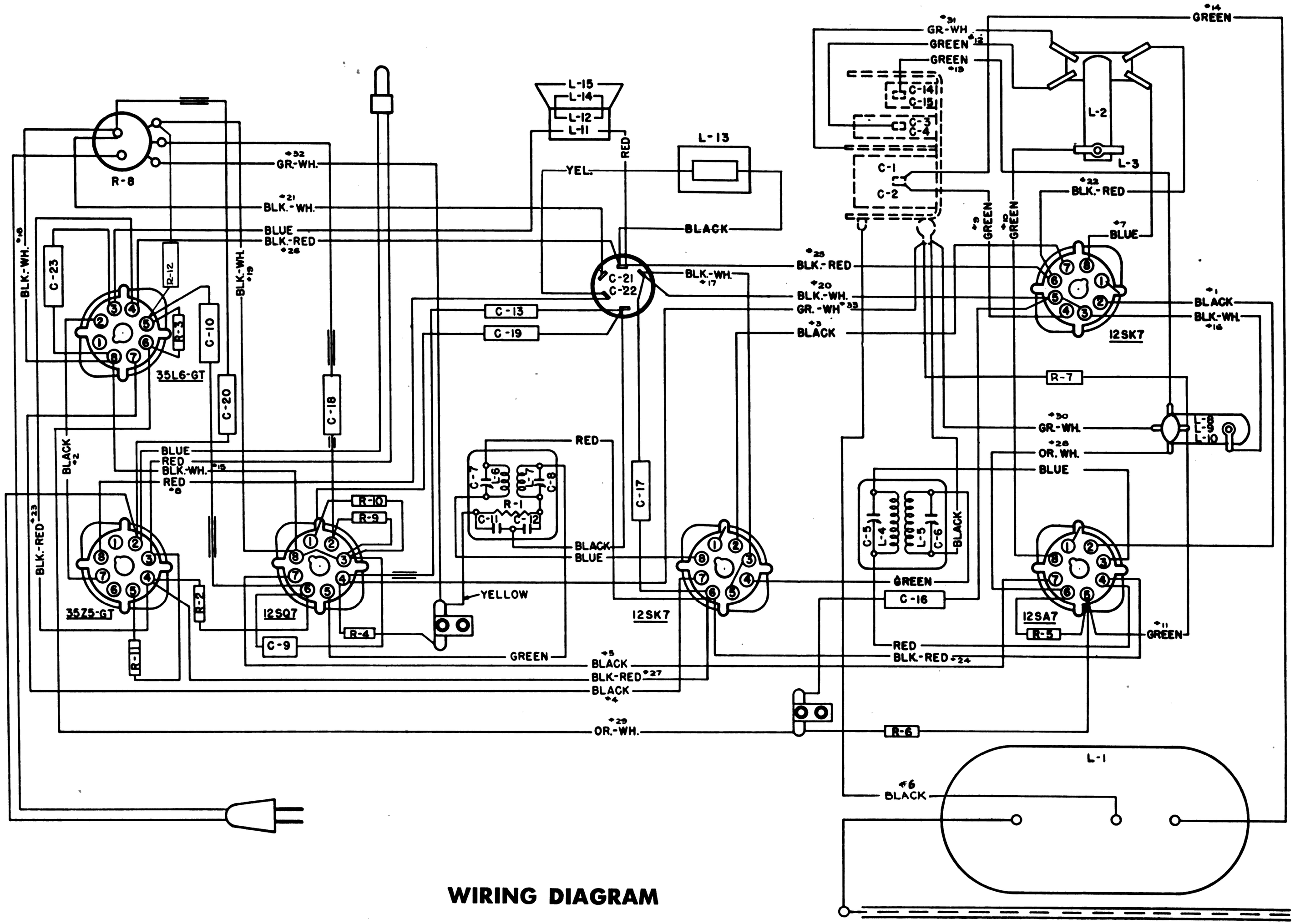

WIRING DIAGRAM

REPLACEMENT PARTS

Resistors

Part No.			
26311	R-11	15	Ohm Resistor
26349	R- 5	22,000	Ohm Resistor
26357	R- 6	100,000	Ohm Resistor
26362	R-10	270,000	Ohm Resistor
26364	R- 2	390,000	Ohm Resistor
26366	R- 3	560,000	Ohm Resistor
26373	R- 4	2.2	Meg. Resistor
26381	R- 7, 9	10	Meg. Resistor
28196	R-12	2.7	Meg. Resistor
145001	R- 8	Volume Control-off-on-switch	

Capacitors

Part No.		
24559	C- 9	100 mmf. Capacitor
25485	C-10, 18	.01 mfd. Capacitor
40632	C-13, 19, 20-16	.05 mfd. Capacitor
111001	C-21, 22	Electrolytic Capacitor 2-40 mfd.
23483	C-17	0.1 mfd. Capacitor
27646	C-23	.002 mf. Capacitor
110001	C- 1, 2, 3, 4, 14, 15	Variable Capacitor

Coils—Transformers

Part No.		
114001	L- 2, 3	RF Coil Assembly
114002	L- 8, 9, 10, C-14, 15	Osc. Coil Assembly
114301	L- 4, 5, C-5, 6	1st I.F. Transformer
114302	L- 6, 7, C-7, 8, 11, 12, R-1	2nd I.F. Transformer
139005	L- 1	Loop Assembly
155001	L-11, 12, 13, 14, 15	Speaker Assembly

Miscellaneous

Part No.	
30151	Socket—8 Pt.
152001	Socket, Pilot Light
138008	Dial Lens HB-HI
105048	Bracket, Right Dial
105049	Bracket, Left Dial
122011	Dial HW, HB, HI, HY
122003	Dial—HM
144001	Pointer—1101-HB, HI, HW, HY
144002	Pointer—1101-HM
124001	Drive Cord Assembly
32075	Pulley
40546	Clip, Pulley
30933	Pilot Light
33218	Power Supply Cord
134001	Knob (1101-HW) (2)
134002	Knob (1101-HY) (2)
134003	Knob (1101-HM) (2)
134004	Knob (1101-HB) (2)
134005	Knob (1101-HI) (2)

Series 11

Production changes replace the Electro Magnet Speaker with a Permanent Magnet Speaker.

(Note separate mounting of output transformer and addition of choke in place of field coil.)

Part No.	
155013	Speaker Assembly
155020	L-11-12 Output Transformer
161004	L-13 Choke for PM Speaker
155006	L-15 Speaker Cone Assembly

NOTE—When ordering replacement parts always specify series number as well as model and part number. Series number is stamped on back of chassis.

STROMBERG-CARLSON CO., ROCHESTER 3, N. Y.

P-146004 Issue 2

Printed in the U. S. A.