STROMBERG-CARLSON SERVICE NOTES

AC-DC BATTERY-RADIO RECEIVER NO. 1105

SERIES NO. 10—11

IDENTIFICATION TABLE

Model	Chassis	Cabinet	Speaker
1105	112009	108025	155013

VAGABOND — PORTABLE

SPECIFICATIONS

Voltage Rating.....105-125 Volts
Type of Circuit.....Superheterodyne
Tuning Range.....540 Kc. to 1600 Kc.
Number and type of Tubes—6
1—1LG5.....R.F. Amplifier
1—1LC6.....Converter
1—1LG5.....I.F. Amplifier
1—1LD5.....Demodulator, A.V.C., 1st Audio
1—3LF4.....Power Output
1—117Z6GT.....Rectifier
Input Power Rating.....25 Watts
Input Power Frequency.....25-60 Cycles AC-DC
Intermediate Frequency.....455 Kc.
Speaker Voice Coil Impedance.....at 400 Cycles 3.5 Ohms
Speaker.....PM
Power Output ..... 170 Milliwatts AC; 180 Milliwatts Batt.

ALIGNING

Never realign unless absolutely necessary.

Use a good signal generator modulated at 400 or 1000 cycles with variable output voltage. Use a sensitive output meter across the voice coil of the speaker. Always align using the smallest possible input from the signal generator. A strong signal makes adjustments approximate. Always have volume control "full on".

Refer to Location Chart on page two for trimmer locations.

Aligning Procedure *(follow this order exactly)*

Intermediate Frequency Adjustments

The built-in loop should remain connected to the antenna and ground terminals. (or use a dummy loop).

1. Turn the tuning control to the extreme low frequency position *(Variable capacitor plates all the way in).*
2. Connect both signal generator leads to an 8 inch radiating loop *(1 turn).*

   Place the radiating loop close to the antenna of the receiver. The antenna in the 1105 is built around the carrying case.
3. Introduce a modulated signal of 455 KC to the radiating loop.
4. Adjust the I.F. aligners for maximum output in the following order:
   A. Secondary of second I.F. Transformer
   B. Primary of second I.F. Transformer
   C. Secondary of first I.F. Transformer
   D. Primary of first I.F. Transformer

Dial Pointer Adjustment

Align the two arrow pointers, located at the extreme ends of the dial, horizontal with respect to the chassis base.

Radio Frequency Adjustments

The built-in antenna should remain connected to the antenna and ground terminals of the receiver.

1. Leave signal generator and radiating loop connected in same position as for I.F. Transformer.
2. Set signal generator and receiver tuning dial to 1400 kilocycles. Arrow on dial scale indicates 1400 kilocycles.
3. Adjust the oscillator, radio frequency and antenna trimmers for maximum output.
4. Set both the signal generator's frequency and the receiver's tuning dial to 600 kilocycles and check calibration.

Note: If the calibration is off at 600 kilocycles, operations 2 and 3 may be repeated until the best results are obtained.

THE EXCLUSIVE STROMBERG-CARLSON COLOR CODE SCHEMATIC

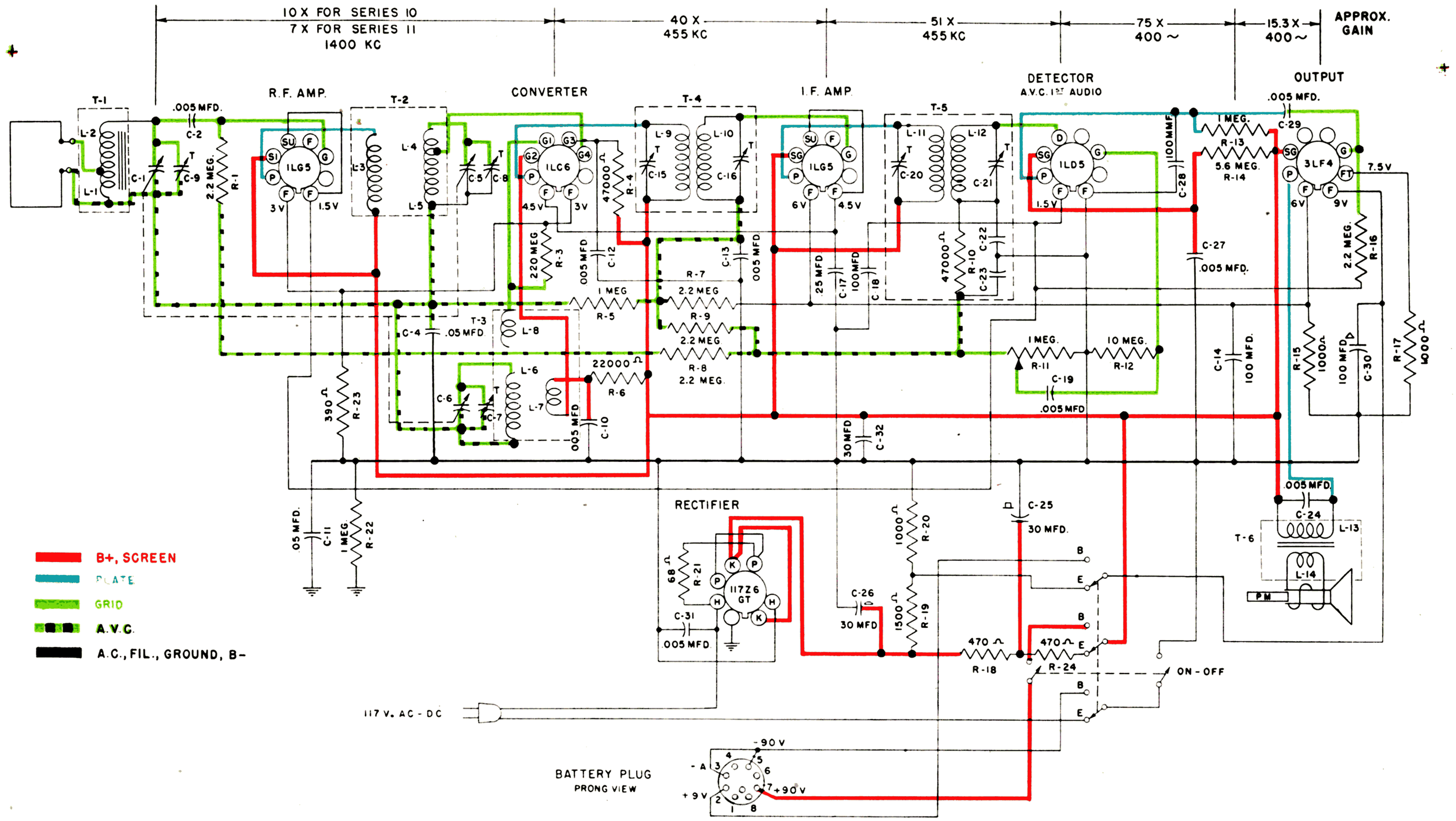

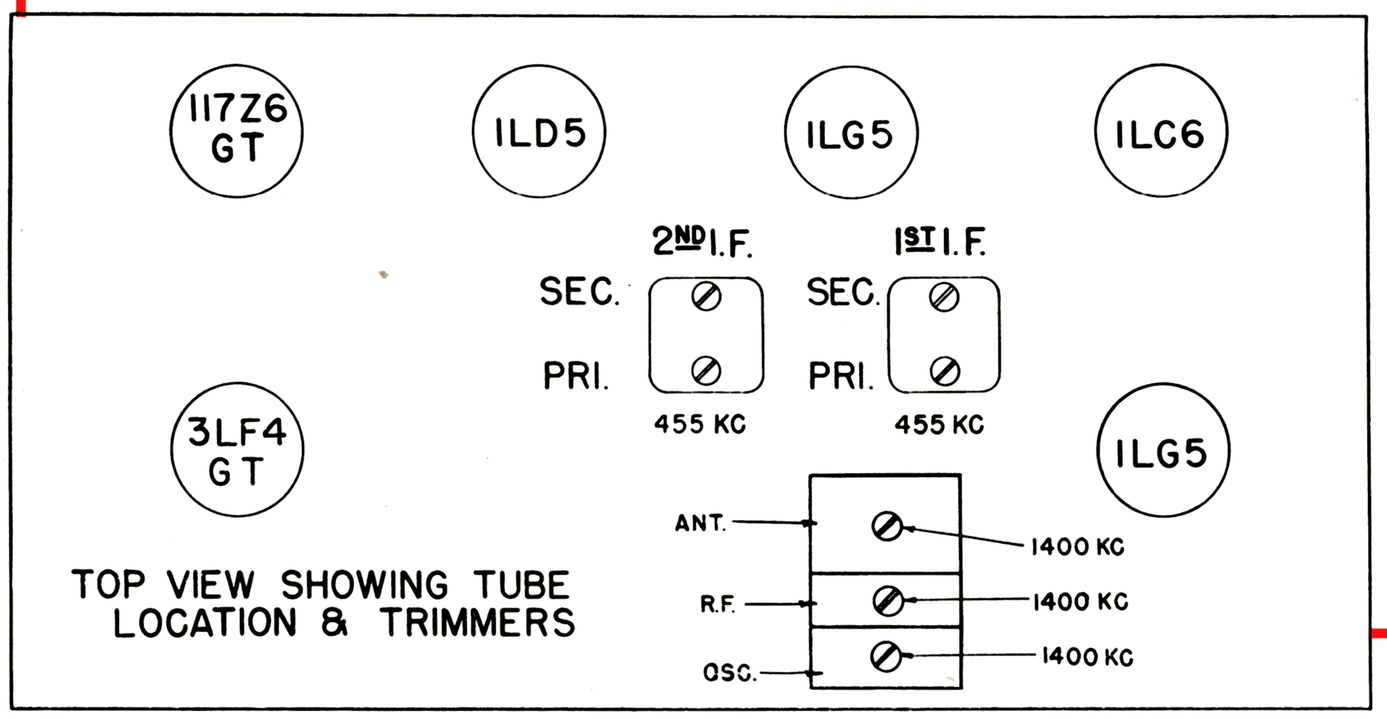

TOP VIEW SHOWING TUBE LOCATION & TRIMMERS

Tube and Trimmer Chart

Voltage Chart

Measurements are made at 117 volt line, using electronic voltmeter.

Except where otherwise indicated, voltages are D.C. and are positive with respect to the reference point which is minus or neutral buss.

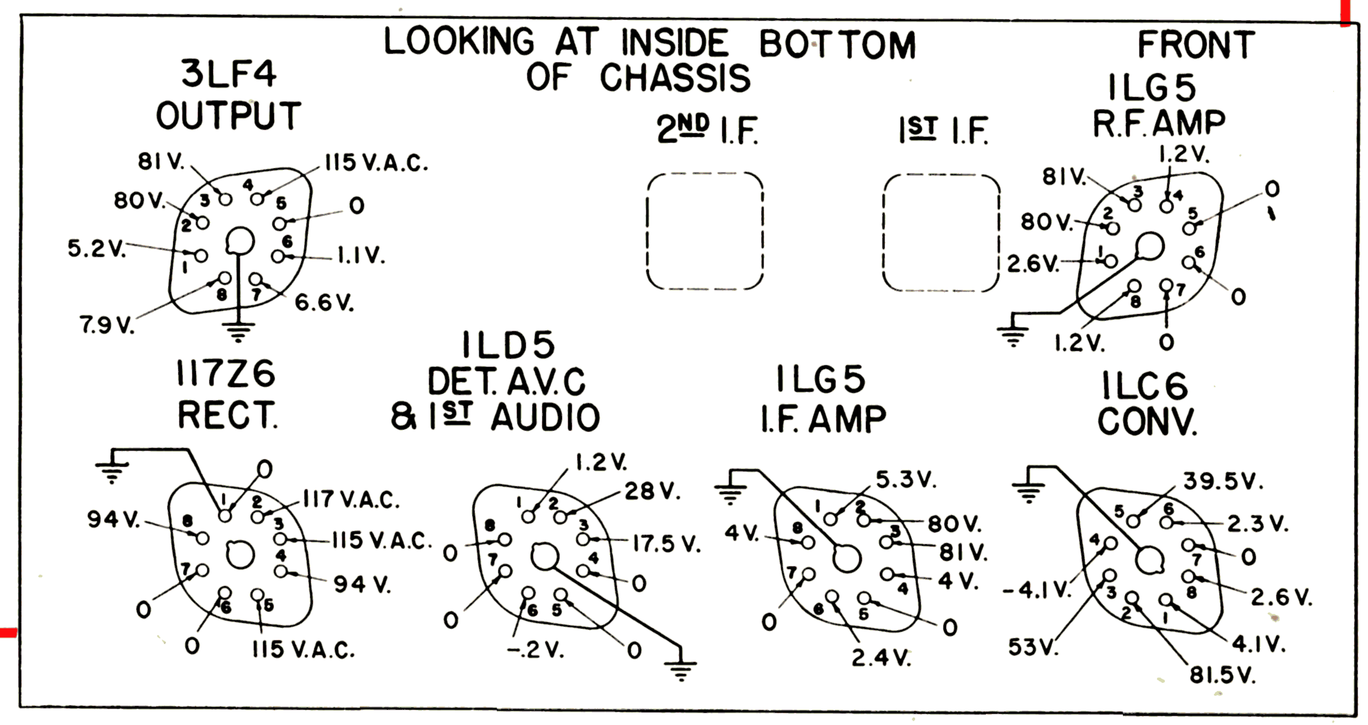

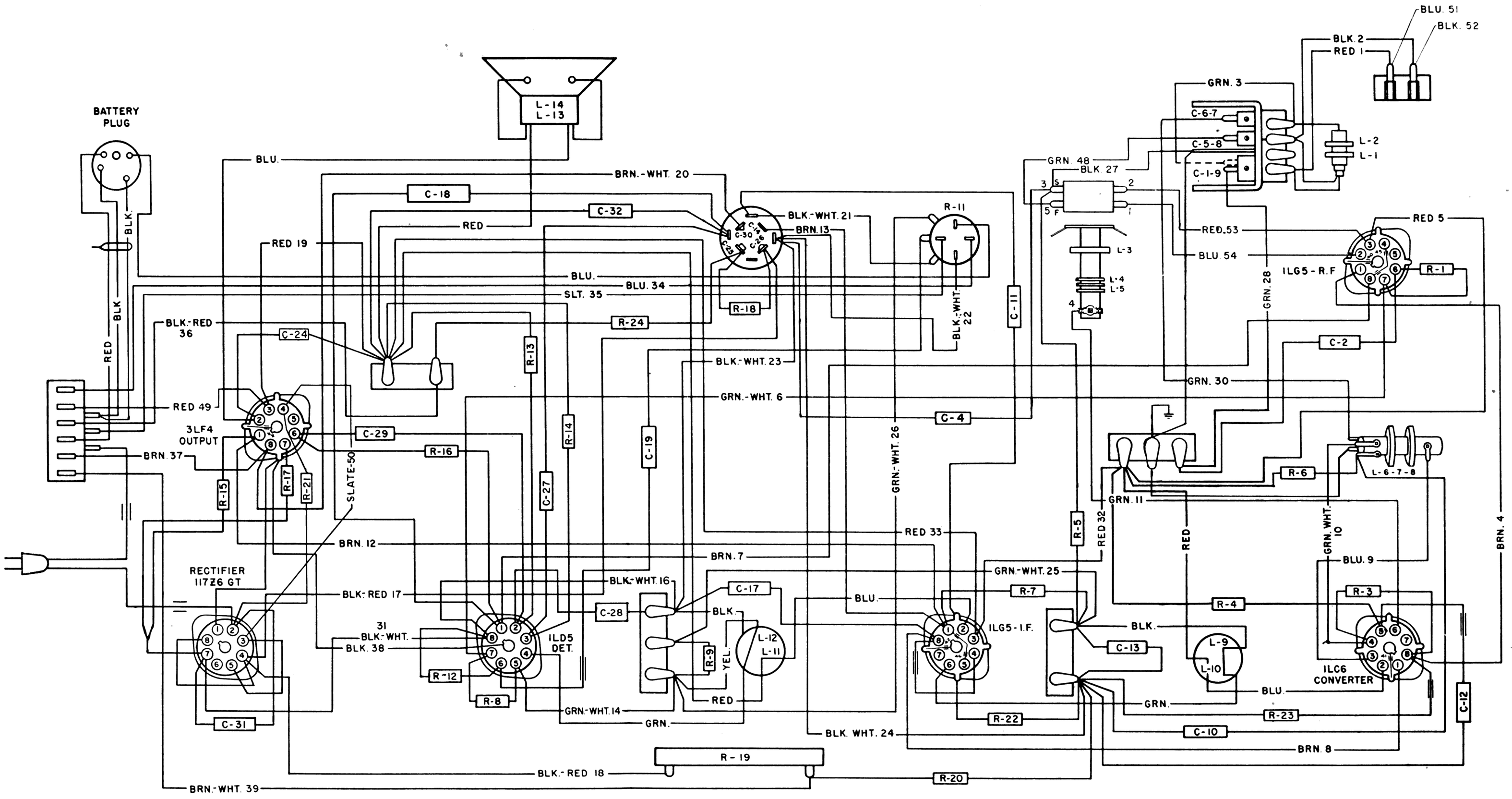

WIRING DIAGRAM

REPLACEMENT PARTS

Resistors

27407	R-6	22,000 Ohm
28153	R-23	390 Ohm
28154	R-18-24	470 Ohm
28158	R-15-17	1,000 Ohm
28177	R-4	47,000 Ohm
28183	R-3	.22 Meg.
28191	R-5-13-22	1. Meg.
28195	R-1-7-8-9-16	2.2 Meg.
28200	R-14	5.6 Meg.
28203	R-12	10. Meg.
45529	R-20	1,000 Ohm 1 W
114310	R-10	47,000 Ohm
145007	R-11	1. Meg. Volume Control Off-On Switch
149015	R-19	1,500 Ohm Voltage Divider
149206	R-21	68 Ohm 2 W

Capacitors

27760	C-2-10-12-13-19-24-27-29-31	.005 mf.
34800	C-28	100 mmf.
40632	C-4-11	.05 mf.
110001	C-1-9-5-8-6-7	Variable Capacitor
110010	C-18	100 mfd. Electrolytic
111008	C-14-25-26-30	100 mfd., 30 mfd., 30 mfd., 100 mfd. Electrolytic
111013	C-32	30 mfd. Electrolytic
110421	C-17	.25 mfd.

Transformers, and Coils

114001	T-2 (L-3-4-5)	RF Coil
114023	T-1 (L-1-2)	Antenna Coil
114024	T-3 (L-6-7-8)	Oscillator Coil
114025	R.F. Coil used on Series 10	See Note Page 4
114309	T-4 (L-9-10-C-15-16)	1st I.F. Transformer
114310	T-5 (L-11-12-C-20-21-22-23-R-10)	2nd I.F. Transformer
155006		Speaker Cone Assembly
155011	T-6 (L-13-14)	Output Transformer
155013		Speaker Assembly

Miscellaneous

30151	Socket, Tube 117Z6
33218	Cord, AC
34590	Socket, Tube (4)
109008	Cable Plug Assembly, Battery
116001	Contact Strip, Antenna
122010	Dial Scale
124002	Cord, Dial Drive
131001	Grommet, Variable Mounting
131003	Grommet, Tube Socket 1LD5
144005	Indicator, Off-On
150011	Shaft, Dial Drive
151015	Shield, Tube
152008	Socket, Tube 1LD5
156009	Spring, Indicator
158008	Switch, AC-Batt.
159011	Cord Tip, Antenna Red
159012	Cord Tip, Antenna Black
168004	Battery Pack

Knobs and Cabinet Parts

24135	Tips, Felt
130013	Grille
132041	Handle, Carrying
132042	Handle, Panel
134015	Knob (2)
138007	Lens, Dial

Series 10 employed R.F. Coil 114025. This has been superseded by coil No. 114001. Rewire to use 114001 as shown on Schematic and Wiring Diagram.

NOTE—When ordering replacement parts always specify series number as well as model and part number. Series number is stamped on back of chassis.

STROMBERG-CARLSON CO., ROCHESTER 3, N. Y.