STROMBERG-CARLSON SERVICE NOTES
AC RADIO RECEIVER NO. 1110
SERIES NO. 10

IDENTIFICATION TABLE

Model	Chassis	Cabinet	Speaker	Phono.
1110-HW Walnut	112006	108021	155013 PM	———
1110-PTW Walnut	112006	108023	155013 PM	148007

SPECIFICATIONS

Voltage Rating.....105-125 Volts
Type of Circuit.....Superheterodyne
Tuning Range..S.W. 8.7—15.5 MC. Broadcast 540 KC.—1600 KC.
Number and type of Tubes—6

1—6SK7.....R.F. Amplifier
1—6SA7.....Converter
1—6SK7.....I.F. Amplifier
1—6SQ7.....Demodulator, A.V.C., 1st Audio
1—6K6GT.....Power Output
1—6X5GT.....Rectifier

Input Power Rating..... Radio 45 Watts, Phono. 60 Watts
Input Power Frequency..... 60 Cycles AC.
Intermediate Frequency .....455 KC.
Speaker Voice Coil Impedance.....at 400 Cycles 3.5 Ohms
Power Output.....2 Watts

ALIGNING

Never realign unless absolutely necessary.

Use a good signal generator modulated at 400 or 1,000 cycles, with variable output voltage and a sensitive output meter across the voice coil of the speaker.

Always align using the lowest possible input from the signal generator. A strong signal makes adjustments approximate.

Always have the volume control "full on."

Aligning Procedure *(follow this order exactly)*

Intermediate Frequency Adjustments.

1. Set range switch to Standard Broadcast Position.
2. Tune set to extreme high frequency end of dial.
3. Connect the ground terminal of the signal generator to the ground terminal of the chassis.
4. Introduce a modulated signal of 455 KC. to the grid of the 6SA7 Converter tube (middle section of gang condenser) using a 0.1 mfd. capacitor in series with the output lead of the signal generator.
5. Adjust the I.F. aligners for maximum output in the following order:
   a. Secondary of second I.F. transformer.
   b. Primary of second I.F. transformer.
   c. Secondary of first I.F. transformer.
   d. Primary of first I.F. transformer.

Dial Pointer Adjustment

With plates of the gang tuning capacitor fully engaged make certain that the dial pointer is in a horizontal position directly on the calibration marks located at the low frequency end of dial scale. Adjust the dial pointer if necessary.

Radio Frequency Adjustments

Standard Broadcast Range.

Antenna must remain connected for R.F. adjustments.

1. With the signal generator output lead connected to the Antenna and Ground terminal of the receiver, tune the signal generator frequency and receiver tuning dial to 1400 KC.
2. Adjust the oscillator, R.F. and antenna trimmers of the gang condenser for maximum signal.
3. Set the signal generator frequency and receiver tuning dial to 600 KC.
4. Adjust the 600 KC. padding condenser in oscillator coil shield for maximum signal.
5. Adjust the iron core in antenna transformer for maximum output. (Underside of chassis)
6. Repeat the above procedure until no further change is required.

Radio Frequency Adjustments

Short Wave Range

1. Set the range switch to Short Wave position.
2. Set the signal generator frequency and receiver tuning dial to 14 MC.
3. Connect the output of the signal generator to the antenna terminal on the chassis.
4. Adjust the oscillator, R.F. and antenna trimmers for maximum output.
5. Repeat the above procedure until no further change is required.

THE EXCLUSIVE STROMBERG-CARLSON COLOR CODE SCHEMATIC

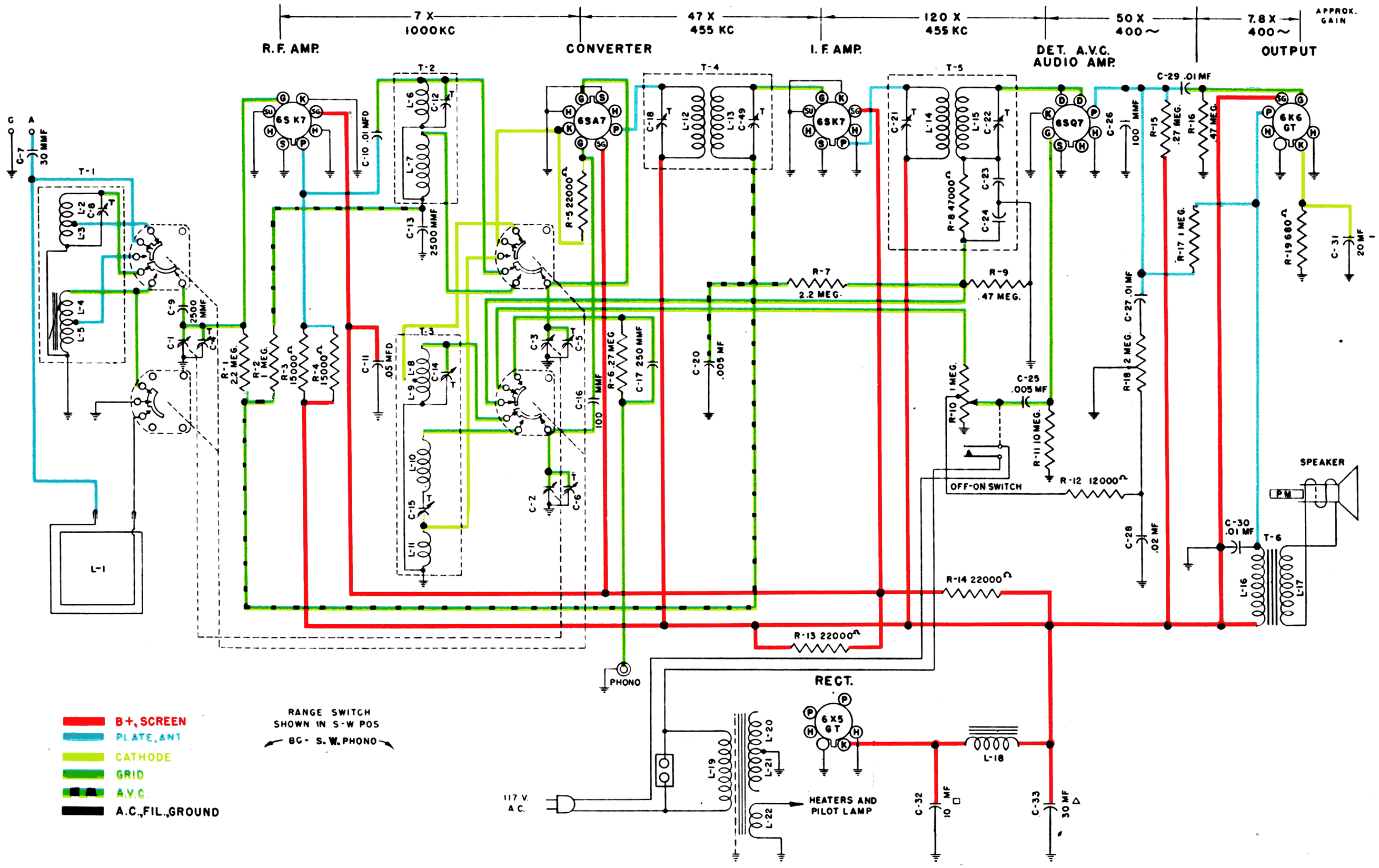

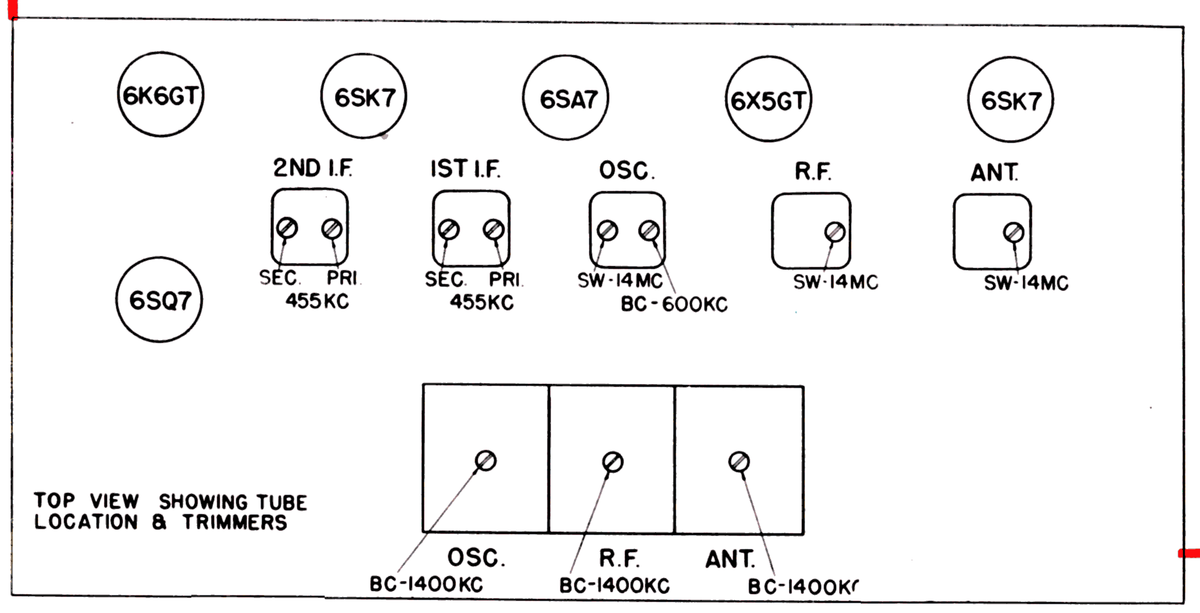

Tube and Trimmer Chart

Voltage Chart

Measurements are made at 117 volt line, using electronic voltmeter.

Except where otherwise indicated, voltages are D.C. and are positive with respect to the reference point which is ground or chassis.

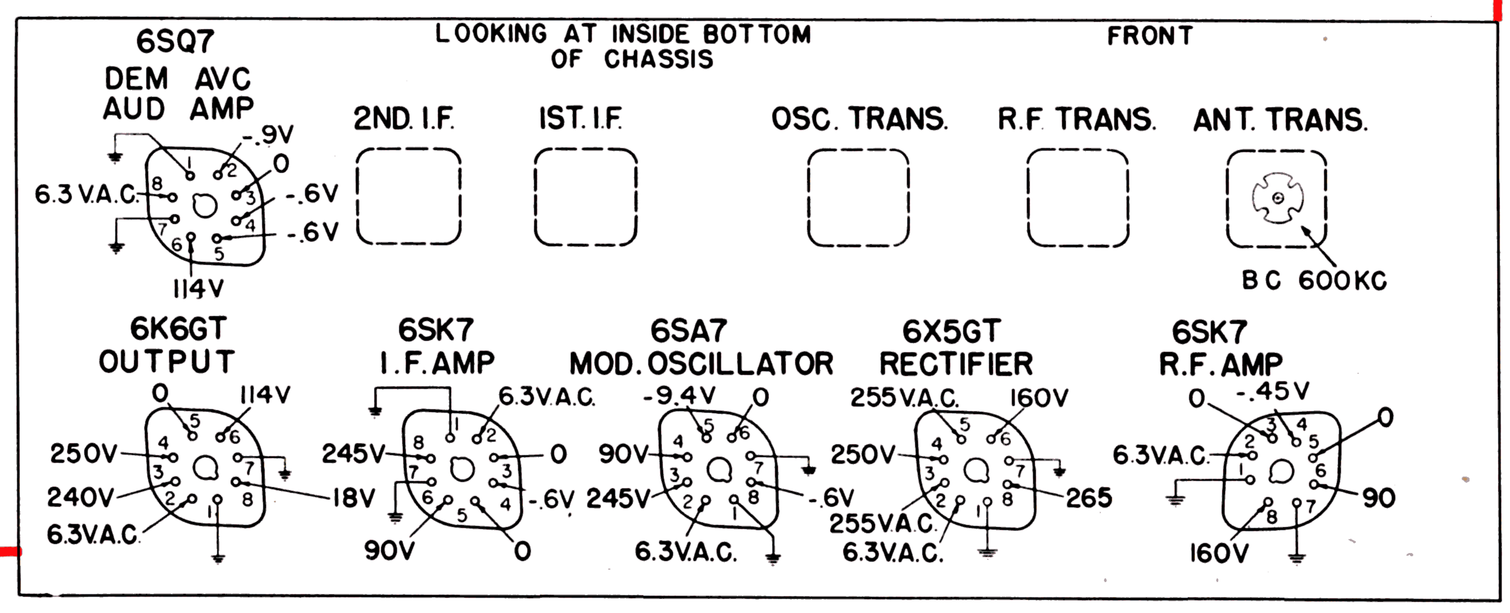

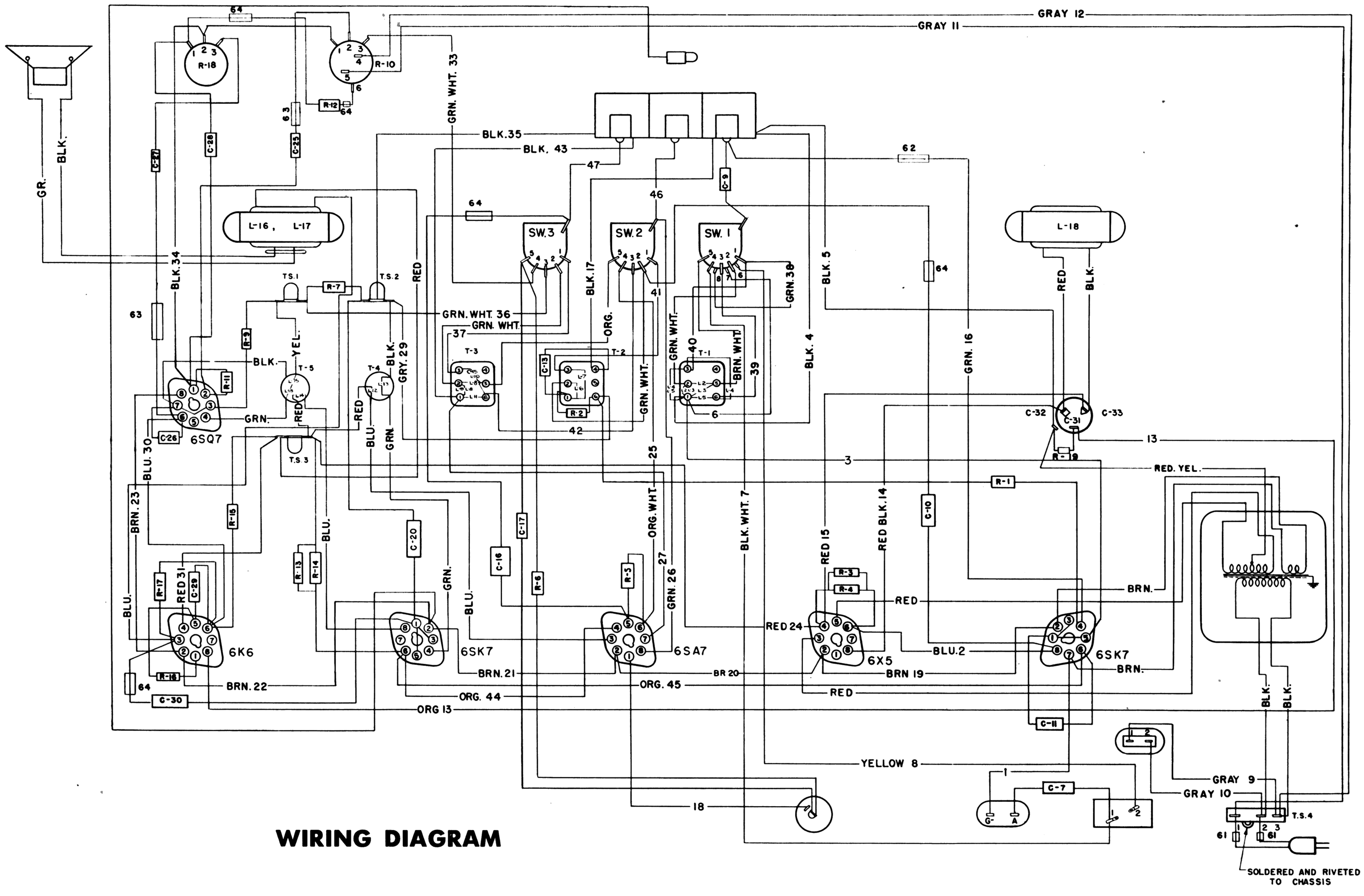

WIRING DIAGRAM

REPLACEMENT PARTS

Capacitors

25376	C-17	250 mmf.
25484	C-28	.02 mf.
25485	C-10-27-29-30	.01 mf.
27760	C-20—C-25	.005 mf.
29559	C-9-13	2500 mmf.
34800	C-16-26	100 mmf.
34889	C-7	30 mmf.
40632	C-11	.05 mf.
110010	C-1-2-3-4-5-6	Variable Capacitor
111004	C-31-32-33	20-10-30 mfd. Electrolytic

Resistors

27407	R-5	22,000 Ohm
28171	R-12	12,000 Ohm
28184	R-6-15	.27 Meg.
28187	R-8-9-16	.47 Meg.
28191	R-2-17	1 Meg.
28195	R-1-7	2.2 Meg.
28203	R-11	10 Meg.
145004	R-18	Tone Control
145005	R-10	Volume Control, Off-On
149011	R-13-14	22,000 Ohm
149174	R-19	680 Ohm
149186	R-3-4	15,000 Ohm

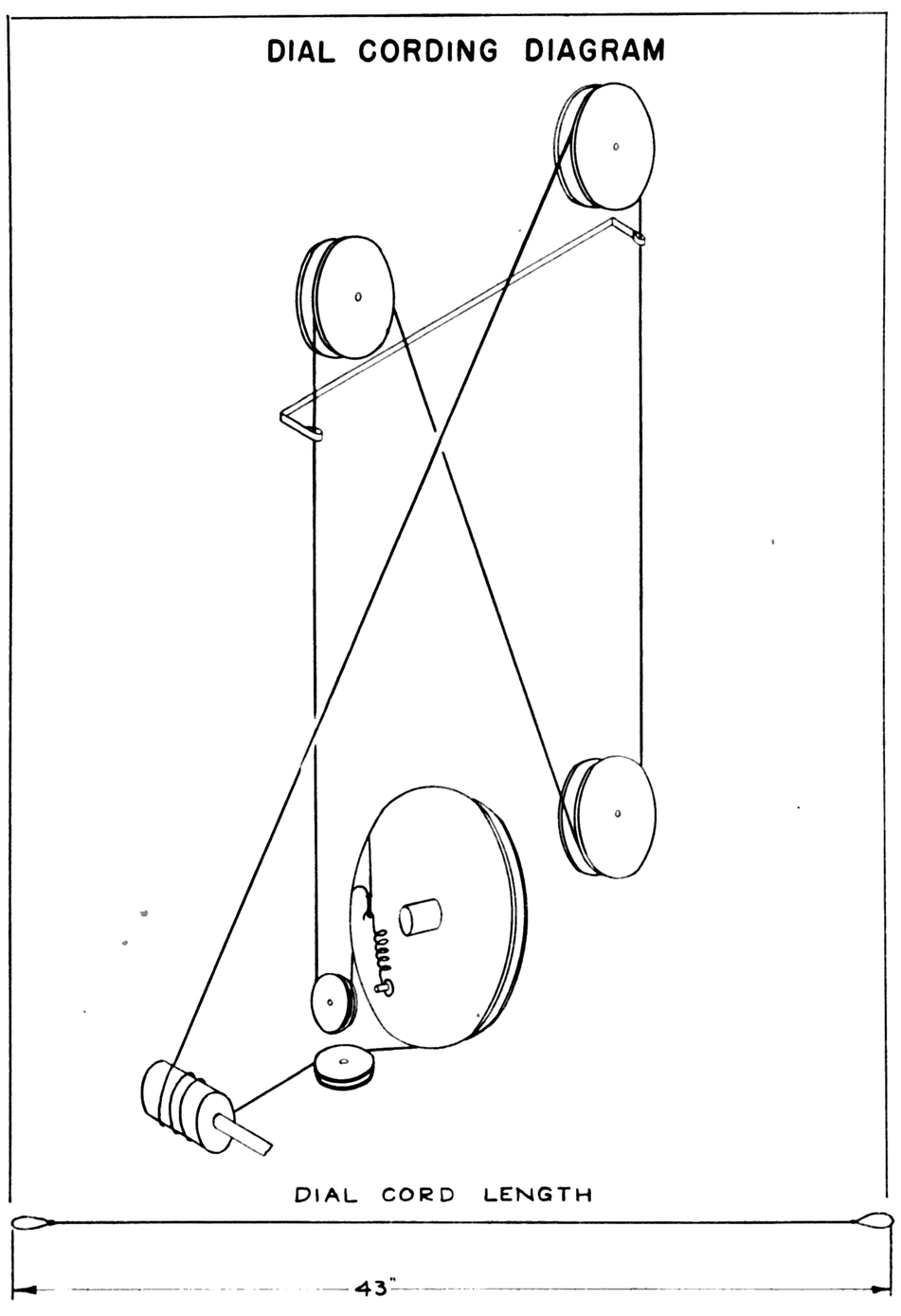

PART No. 124005

Transformers, and Coils

114011	T-1 (L-2-3-4-5) (C-8)	Antenna Coil
114012	T-2 (L-6-7) (C-12)	R.F. Coil
114013	T-3 (L-8-9-10-11) (C-14-15)	Oscillator Coil
114307	T-4 (L-12-13) (C-18-49)	1st I.F. Transformer
114308	T-5 (L-14-15) (C-21-22-23-24-R-8)	2nd I.F. Transformer
155006		Speaker Cone
155013		PM Speaker Assembly
161001	L-18	Choke
161207	T-6 (L-16-17)	Output Transformer
161402	L-19-20-21-22	Power Transformer

Switches

145005	Volume Control, Off-on Switch
158004	Range Switch

Miscellaneous

24135	Felt Tips
26122	Antenna — Ground Strip
28694	Socket, Pilot
29956	Lamp, Pilot
32048	Socket, AC. Outlet
32075	Pulley, Small
32076	Pulley, Medium
32077	Pulley, Large
33218	Cord, AC.
34421	Connector, Phono
40546	Clip, Pulley
80881	Crystal Cartridge (L-70)
101047	Back
122007	Dial Scale
124005	Dial Cord
129003	Gear Assembly, Switch Drive
143001	Plug, Antenna
144004	Pointer, Dial
146025	Station Call Letters
150007	Shaft Assembly, Dial Drive
150008	Shaft, Switch Drive
152002	Socket, Tube
152005	Socket, Loop
156008	Spring, Dial Cord

Knobs and Cabinet Parts

32224	Knob,—Volume, Tone, Tuning
35725	Knob,—Range
80874	Decal—Tone, Volume-Off-on, Stations, Range
80875	Grille and Baffle, Assembly—Left Hand
80876	Grille and Baffle, Assembly—Right Hand
80877	Lid Support
80878	Hinge
107003	Push Button
125005	Escutcheon and Lens, Dial

STROMBERG-CARLSON CO., ROCHESTER 3, N. Y.