STROMBERG-CARLSON SERVICE NOTES
AC RADIO RECEIVER NO. 1121
SERIES NOS. 10—11—12

IDENTIFICATION TABLE

Model	Chassis	Cabinet	Speaker	Phonograph Equipment
PFM	112004	41654	33435	148001
PFW	112004	41653	33435	148001
PGM	112004	35777	33435	41612
PGW	112004	35985	33435	41612
PLW	112004	108015	33435	148001
PLM	112004	108014	33435	148001
M1-0	112004	39213	33435	41612
PSM	112004	108028	33435	41612
M2-Y	112004	108019	33435	41612
M2-W	112004	45207	33435	41612
LW	112004	47908	33435	———
HW	112004	108020	155012	———
M2-M	112004	108043	33435	41612

SPECIFICATIONS

Voltage Rating.....105-125 Volts

Type of Circuit.....Superheterodyne

Tuning Range:.....Broadcast—540—1620 KC SW 8.8—10.2 MC
FM 42-50 MC 88-108 MC

Number & Type of Tubes—11

1—6SG7 ..... R.F. Amplifier
1—6SB7 ..... Converter
1—6SG7 ..... 1st I.F. Amp.
1—6SH7 ..... 2nd I.F. Amp.
1—6SH7 ..... Limiter
1—6H6 ..... Discriminator
1—6SQ7 ..... A.V.C., Demodulator & 1st Audio
1—6SC7 ..... Driver & Inverter
2—6V6GT ..... Output
1—5U4G ..... Rectifier

Input Power Rating..... Phono. models 140 Watts, Radio 127 Watts

Intermediate Frequency ..... A.M. 455 KC, F.M. 10.7 MC.

Speaker Voice Coil Impedance at 400 cycles.....3.5 Ohms

Speaker Field Resistance .....950 ohms, Model HW 800 ohms

Power Output.....8 Watts less than 10% Distortion

ALIGNING

Never realign unless absolutely necessary.

Refer to "Location Chart" for alignment adjusters. Allow set to warm up 10 to 15 minutes before attempting to align.

Always align using the smallest possible input from the signal generator. *A strong signal makes adjustments approximate.*

Always have volume full on.

The alignment of this receiver does not require special equipment or information; however, it is well to adhere to the standard procedure as outlined.

The required equipment is: 1 Electronic Voltmeter, 1 Output Meter, 1 Standard Signal Generator, 1 High Frequency Signal Generator, 1 No. 80777 Aligning Tool.

Aligning Procedure *(follow this order exactly)*

Intermediate Frequency Adjustments Amplitude Modulation

The I.F. aligners that are used to adjust the amplitude modulation (AM) channel are found on the top side of the chassis. They consist of 6 adjustable iron cores used to tune the inductance of the 1st, 2nd & 3rd I.F. transformers (161202, 161200, 161201). These cores are found inside the plastic tubes protruding from the top of the I.F. transformers and are equipped with small screwdriver slots.

Caution: These cores are made of high quality R.F. iron and are fragile; therefore care must be used in adjusting them.

1. Connect the signal generator to the modulator grid, terminal number 8 of the 6SB7 converter tube which is connected to the wave band switch, and is identified by a blue dot.
2. Connect the output meter across the voice coil of the speaker (green and black wires from cable).
3. Adjust the signal generator to 455 KC. Use 30% modulation at 400 cycles.
4. Adjust volume control full on.
5. Adjust tone control to maximum high (counter clockwise).
6. Adjust range switch to standard broadcast band, (second position clockwise.)
7. Adjust the tuning selector to approximately 600 KC.
8. Adjust I.F. cores for maximum output with a reduced signal Input.

Frequency Modulation

The I.F. Aligners may be found from the underside of the chassis. The adjusters are 6 Iron cores used to tune the inductance of the high frequency coils.

1. Connect the signal generator to the modulator grid, terminal number 8 of the 6SB7 converter tube, which is connected to the wave band switch, and is identified by a blue dot.

LOCATION CHARTS

TUBES, TRIMMERS AND VOLTAGE

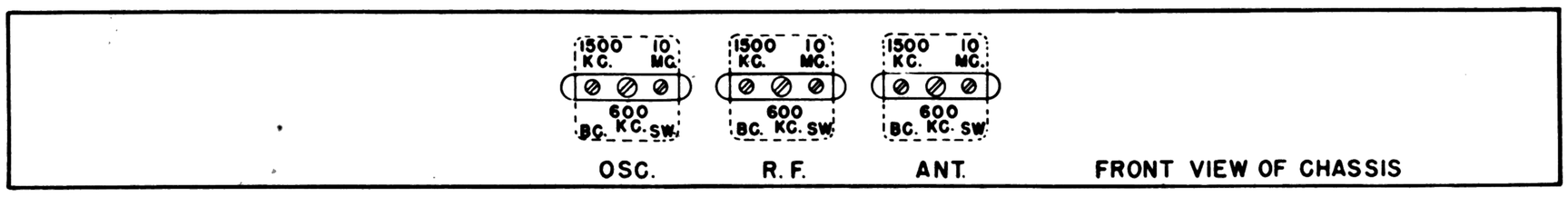

Measurements are made at the 117 volt line, using electronic voltmeter. Except where otherwise indicated, voltages are D. C. and are positive with respect to the reference point which is the chassis.

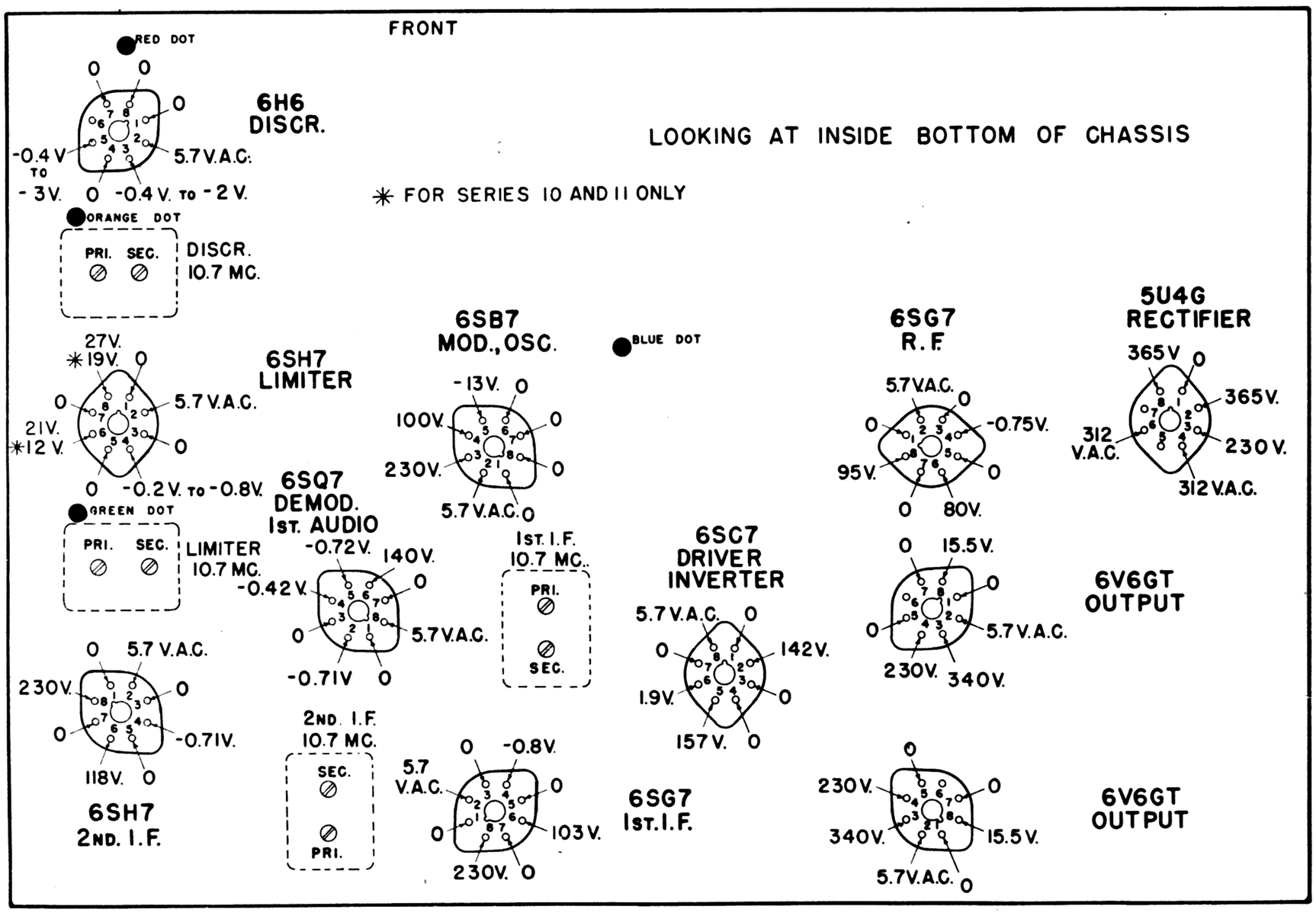

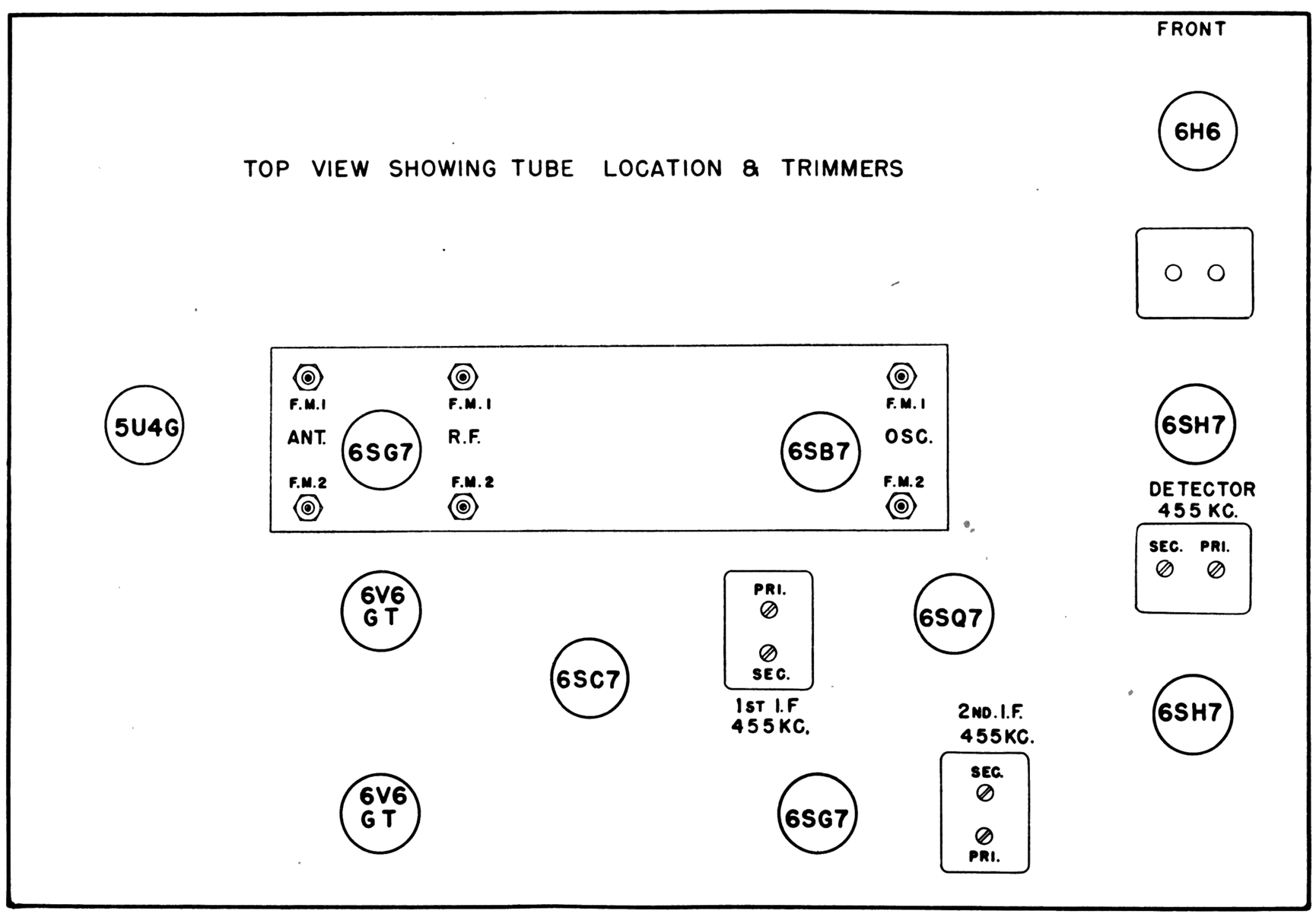

WIRING DIAGRAM

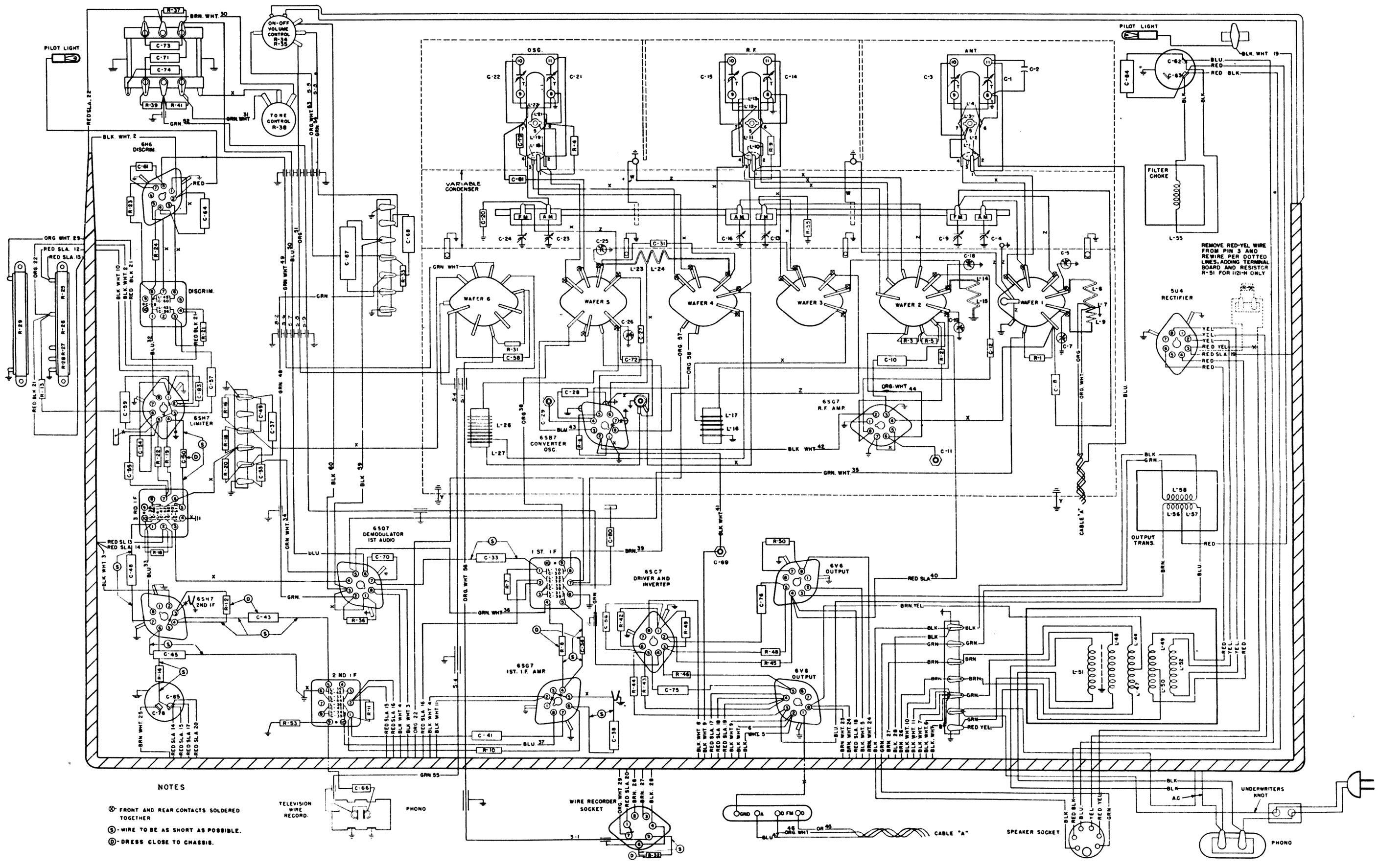

NOTES

⊗ - FRONT AND REAR CONTACTS SOLDERED TOGETHER

Ⓢ - WIRE TO BE AS SHORT AS POSSIBLE.

Ⓓ - DRESS CLOSE TO CHASSIS.

SCHEMATIC

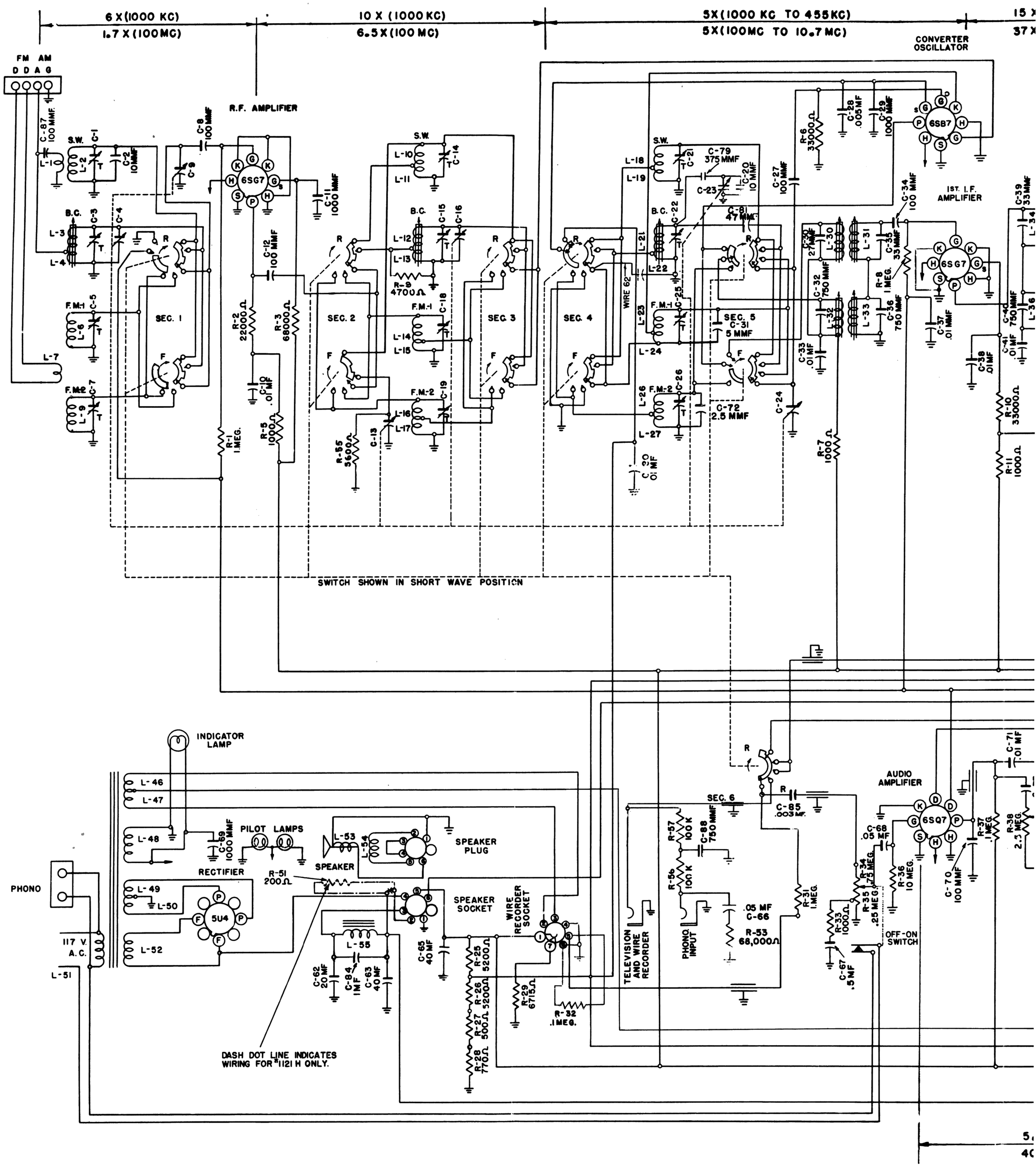
6 X (1000 KC)
1.7 X (100 MC)
10 X (1000 KC)
6.5 X (100 MC)
5 X (1000 KC TO 455 KC)
5 X (100 MC TO 10.7 MC)
CONVERTER OSCILLATOR
FM AM
D D A G
R.F. AMPLIFIER
6SG7
6SB7
1ST. I.F. AMPLIFIER
6SQ7
5U4
SEC. 1
SEC. 2
SEC. 3
SEC. 4
SEC. 5
SEC. 6
WIRE 62
SWITCH SHOWN IN SHORT WAVE POSITION
INDICATOR LAMP
PILOT LAMPS
RECTIFIER
SPEAKER
SPEAKER PLUG
SPEAKER SOCKET
WIRE RECORDER SOCKET
TELEVISION AND WIRE RECORDER
PHONO INPUT
AUDIO AMPLIFIER
OFF-ON SWITCH
PHONO
117 V. A.C.
DASH DOT LINE INDICATES WIRING FOR #1121 H ONLY.

SCHEMATIC

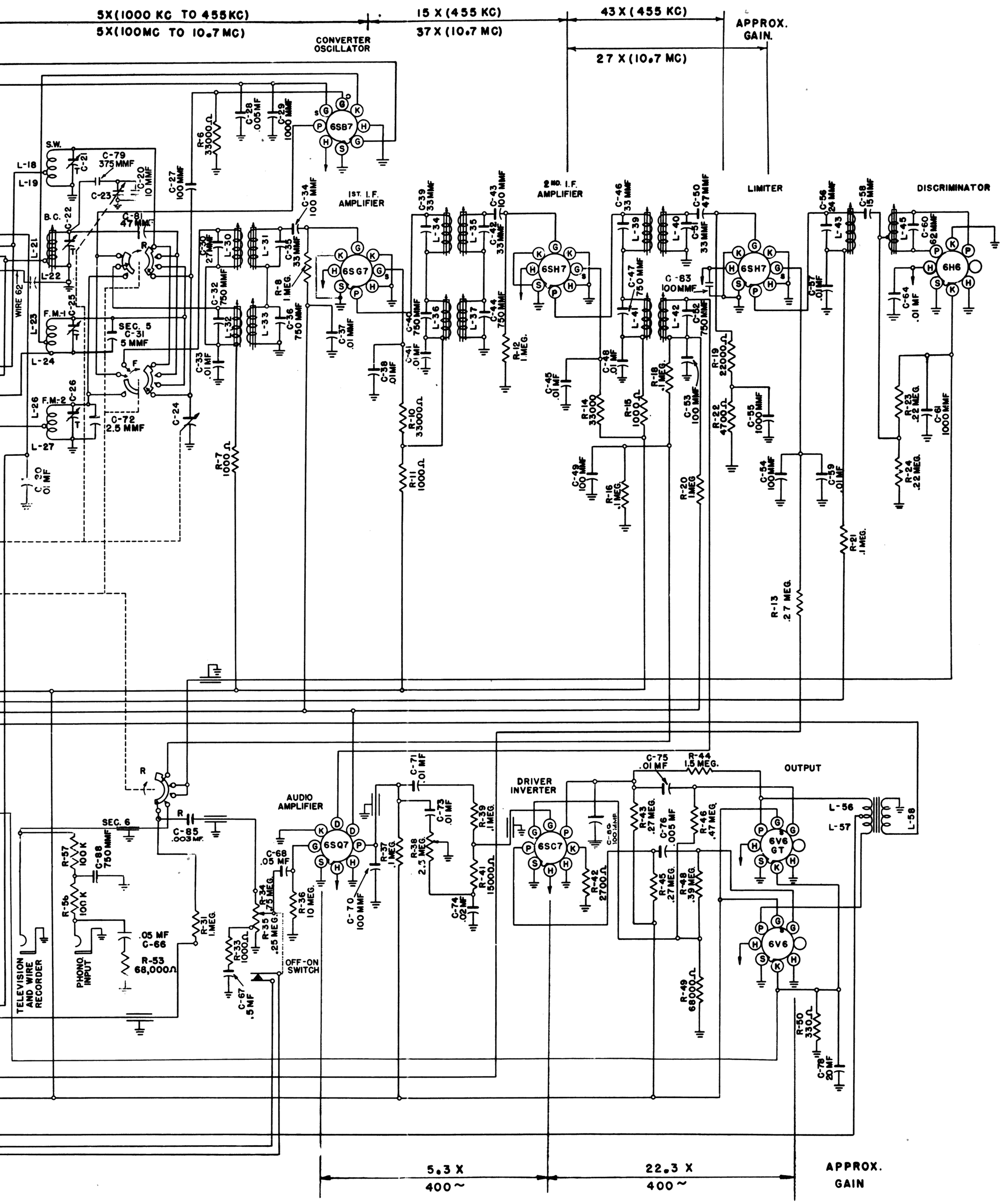
5X(1000 KC TO 455KC)
5X(100MC TO 10.7MC)
CONVERTER OSCILLATOR
15 X (455 KC)
37 X (10.7 MC)
43 X (455 KC)
27 X (10.7 MC)
APPROX. GAIN.
1ST. I.F. AMPLIFIER
2ND. I.F. AMPLIFIER
LIMITER
DISCRIMINATOR
6SB7
6SG7
6SH7
6H6
S.W.
B.C.
F.M.-1
F.M.-2
SEC. 5
SEC. 6
WIRE 62
AUDIO AMPLIFIER
6SQ7
DRIVER INVERTER
6SC7
OUTPUT
6V6 GT
6V6
OFF-ON SWITCH
PHONO INPUT
TELEVISION AND WIRE RECORDER
5.3 X
400~
22.3 X
400~
APPROX. GAIN

STRINGING CHART

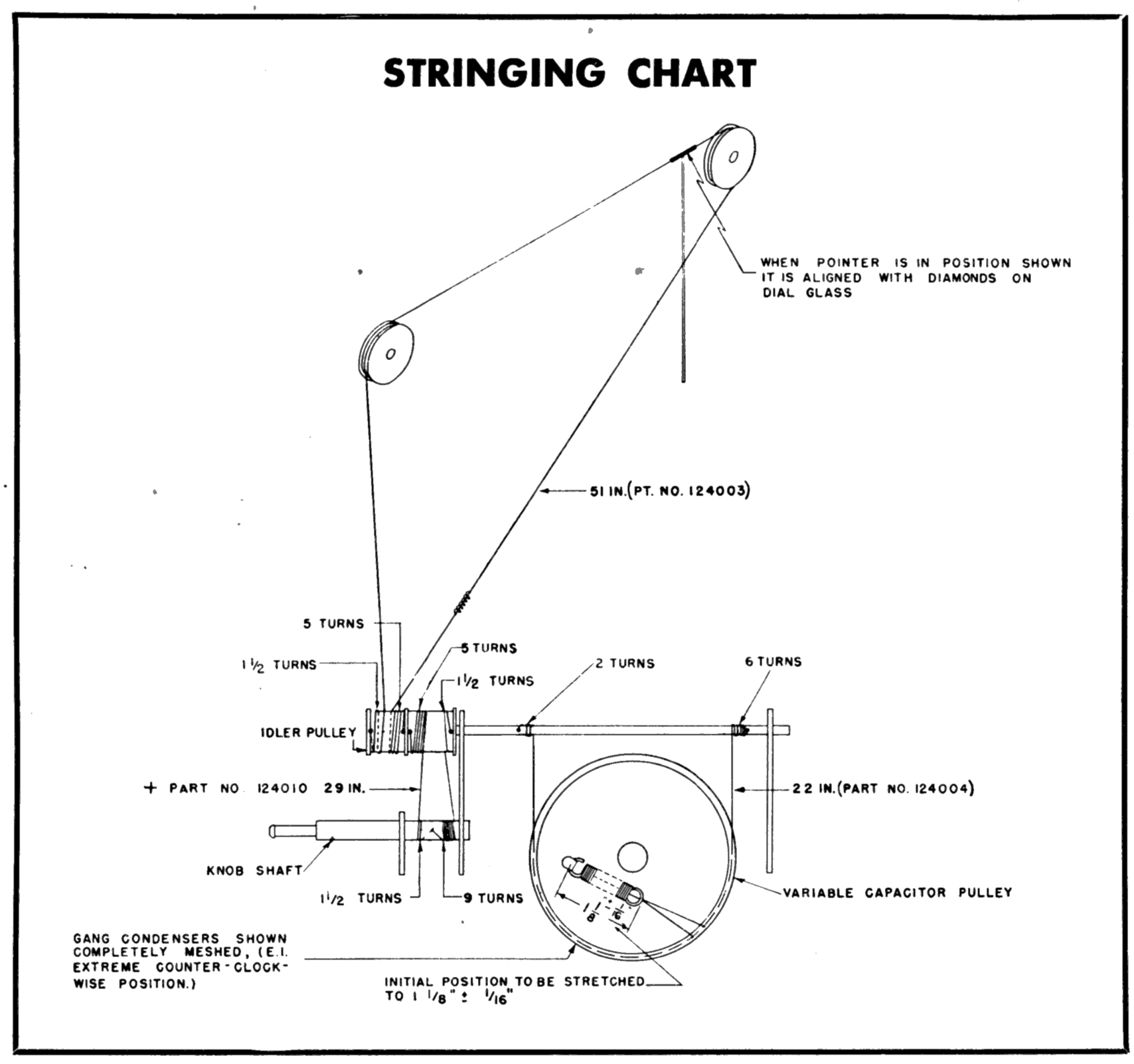

Cabinet Parts

Part No.	PFM PFW	PGM PGW	LW	PLM PLW	M1-0	M2-Y M2-W	HW	PSM	
80681	X	X		X				X	Stop Hinge
132016				X		X			Bullet Catch
37084				X					Key Pull
39200				X	X				Piano Hinge
130007				X					Grille Cloth
130009				X					Grille, Metal
37145				X	X				Lid Support
37148		X							Door—Pull Inv. Std.
38442	X	X			X			X	Bullet Catch
39350		X							Grille Cloth
130006			X						Grille Cloth
130010			X						Grille, Metal
130015	X								Grille Cloth W Album 130004
130016	X								Grille Cloth W Speaker 130005
132020	X								Door—Pull
132027	X								Piano Hinge
130011							X		Grille Cloth
132001					X				Door Strike, Left
132002					X				Door Stop, Left
132003					X				Door Rail, Top Left
132045					X				Concealed Hinge Album Door
132040					X				Door Rail & Plate, Lower Right
132007					X				Door Track, Upper Right
132008					X				Wheel Track, Upper Right
132009					X	X			Door Pull, Concealed
130002					X				Grille Cloth
125001					X	X			Speaker Bezel
132035					X				Door Stop, Bottom Right
132037					X				Door Rail, Lower Left
130003						X			Grille Cloth
132012						X			Door Pull
132013						X			Butt Hinge
132014						X			Door Track
132015						X			Semi-Concealed Hinge
37153								X	Door Pull
37167								X	Grille Cloth
132019	X								Knob Door
38382	X	X	X	X	X	X		X	Glider
108016		X				X		X	Phono Drawer Assem. Comp.
132022	X	X				X		X	Phono Drawer Track, Left
132021	X	X				X		X	Phono Drawer Track, Right
108017	X								Phono Drawer Assem. Comp.

REPLACEMENT PARTS

Resistors

Part No.		
28006	R-16, 18, 21, 32, 37, 39	.1 Meg.
28158	R-4, 5, 7, 11, 15, 33	1,000 Ohm
28163	R-42	2,700 Ohm
28167	R-55	5,600 Ohm
28172	R-41	15,000 Ohm
28175	R-10-14	33,000 Ohm
28179	R-3-49-53	68,000 Ohm
28183	R-23-24	.22 Meg.
28184	R-13-43-45	.27 Meg.
28186	R-48	.39 Meg.
28187	R-46	.47 Meg.
28191	R-20-31	1. Meg.
28193	R-44	1.5 Meg.
28203	R-36	10.0 Meg.
69892	R-50	330 Ohm
149001	R-29	Voltage Divider
149002	R-25, 26, 27, 28	Voltage Divider
149004	R-9-22	4,700 Ohm
149005	R-2-19	22,000 Ohm
149006	R-6	33,000 Ohm
149007	R-1-8-12	1.0 Meg.
149008	R-51 (Model H)	200 Ohm 5 W

Controls—Switches

Part No.		
145002	R-34-35	1 Meg. Volume Control & Switch
145003	R-38	2.5 Meg. Tone and Bass Control

Coils—Transformers—Speakers

Part No.		
33435		Speaker Assembly
33437	L-54	Speaker Field Coil
33438	L-53	Speaker Cone
33518	L-53	Model H Speaker Cone
153001	L-54	Model H Field Coil Speaker
155012		Model H Speaker Assembly
114003	L-10-11-12-13	R.F. Coil Broadcast & S.W.
114004	L-18-19-21-22	Osc. Coil Broadcast & S. W.
114005	L-1-2-3-4	Ant. Coil Broadcast & S.W.
161200	L-34-35-36-37	2nd I.F. Transformer
161201	L-39-40-41-42	3rd I.F. Transformer
161202	L-30-31-32-33	1st I.F. Transformer
161203	L-55	Choke, Filter
161204	L-46-47-48-49-50-51-52	Power Transformer 60 Cy.
161205	L-43-45	Discriminator Transformer
161401	L-56-57-58	Output Transformer
*112005		R.F. Chassis Assembly

*Band Switch, Sockets, variable cap., R.F. coils all bands. This is a complete R.F. assembly. Sold as a unit only.

Capacitors

Part. No.		
24559	C-49-53-70-86	100 mmf.
25484	C-66-74	.02 mf.
25485	C-10-33-37-38-41-45 -48-57-59-64-71-73-75-80	.01 mf.
25487	C-55-61	.001 mf.
27760	C-28-76	.005 mf.
40632	C-68	.05 mf.
110006	C-5-18-19-25-26	R.F. Trimmer (F.M.)
110007	C-7	R.F. Trimmer Ant. (2) (F.M.)
110201	C-32-36-40-44-47-52	750 mmf.
110202	C-2	10 mmf.
110203	C-79	375 mmf.
110401	C-8-12-27-34-43-54-83	100 mmf.
110402	C-50-81	47 mmf.
110403	C-56	24 mmf.
110405	C-58	15 mmf.
110406	C-60	62 mmf.
110407	C-35-39-42-46-51	33 mmf.
110408	C-11-29-69	1000 mmf.
110410	C-30	27 mmf.
110411	C-20	10 mmf.
110412	C-72	2.5 mmf.
110413	C-31	5 mmf.
110414	C-67	.5 mf.
110422	C-84	1 mf.
110430	C-85	.003 mf.
111002	C-62-63	20-40 mf. Electrolytic
111003	C-65-78 Use 111024	40-20 mf. Electrolytic

Miscellaneous

Part No.	
28694	Socket, Pilot
29956	Lamp, Pilot
30269	Corner Mtg., Dial Scale
32076	Pulley, Dial Cord
40546	Clip, Pulley
109001	Cable Assembly, Speaker
113002	Ground Clip, Tube
150004	Drive Shaft, Pulley
150005	Drive Shaft, Dial
124010	Drive Cord
124004	Cord Assembly, Pulley
122006	Dial Scale
124003	Cord Assembly, Pointer
144003	Pointer
151035	Shield, Pilot Lamp
152002	Socket, 8 Point Wafer
152004	Socket, 7 point
33444	Speaker Plug
33218	A.C. Cord
118001	Iron Core (I.F.)
118002	Iron Core (R.F.)
80484	Phono. Cartridge
35866	Call Letters Kit
31539	Phono & Tele. Jack
32048	Socket A.C., Outlet
159002	Ant. Gnd. Dipole Terminal Strip
80777	Aligning Tool

Knobs

Part No.		
32224	Off-On-Vol., Tone	
35725	Range	
37093	Tuning	
32156	Push Button	
134006	On-Off-Vol., Tone M1, M2, HW	Square Edge
134007	Range M1, M2, HW	Square Edge
134008	Tuning M1, M2, HW	Square Edge
80768	Off-On-Vol., Tone M1, M2, HW	Bevel Edge
80769	Range M1, M2, HW	Bevel Edge
80770	Tuning M1, M2, HW	Bevel Edge

Escutcheons

Part No.	
35792	Dial
125002	Dial M1, M2
125009	Dial HW

Decals

Part No.		
34126	(Off-On-Vol.) Designation Plate	
32263	Stations	
121002	Tone	
121003	Range	
121002	Tone	M1-M2-HW
121004	Range	M1-M2-HW

Series 10 has matching Phono. Network for (L72) 80670 Pickup Cartridge.

Series 11 has matching Phono. Network for (LP6) 80484 Pickup Cartridge.

Series 12 R-21 changed from 1000 ohms to .1 Meg.
R-13—.27 Meg. Resistor added.
Leads from R-27, R-28 removed and made common with lead from R-26.
Terminal Number 4 of wire recorder socket grounded.
Center tap of L-46. L-47 removed from ground. and connected to cathode of 6V6 tube.

Printed in U. S. A.