STROMBERG-CARLSON SERVICE NOTES

AC RADIO RECEIVER NO. 1135

SERIES NOS. 10—11

IDENTIFICATION TABLE

Model	Chassis	Cabinet	Speaker	Phono
1135 PFM	112007	37237	155019	148002 & 41613
1135 PLM	112007	35717	155019	41613
1135 PLW	112007	35978	155019	41613

SPECIFICATIONS

Voltage Rating.....105-125 Volts
Type of Circuit.....Superheterodyne
Tuning Range ... Broadcast, 540-1620 KC.—S.W., 8.8—10.2 MC. S.W., 11.2—12.6 MC.—FM (2) 42-50 MC.—FM (1) 88-108 MC.

Number and Type of Tubes—16

1—6SG7.....R.F. Amplifier
1—6SB7.....Converter
1—6SG7.....1st I.F. Amplifier
1—6SH7.....2nd I.F. Amplifier
1—6SJ7.....1st Limiter
1—6SJ7.....2nd Limiter
1—6H6.....Discriminator
1—6SQ7.....AVC, Demodulator and FM Squelch
1—6SQ7.....1st Audio Amplifier
1—6SN7GT.....Audio Driver & Inverter
2—6L6G.....Power Output
1—6SL7GT.....Tuning Indicator Amplifier
1—6SQ7.....Tuning Indicator Amplifier
1—6U5.....Tuning Indicator
1—5R4G.....Rectifier

Input Power Rating.....235 Watts
Intermediate Frequency.....AM. 455 KC. FM-10.7 MC.
Speaker Voice Coil Impedance at 400 Cycles.....10 Ohms
Speaker Field Resistance.....210 Ohms
Power Output.....19 Watts less than 10% Distortion

ALIGNING

Never realign unless absolutely necessary.

Refer to "Location Chart" for alignment adjusters. Allow set to warm up 10 to 15 minutes before attempting to align.

Always align using the smallest possible input from the signal generator. A strong signal makes adjustments approximate.

Always have volume full on.

The alignment of this receiver does not require special equipment or information; however, it is well to adhere to the standard procedure as outlined.

The required equipment is: 1 Electronic Voltmeter, 1 Output Meter, 1 Standard Signal Generator, 1 High Frequency Signal Generator, 1 No. 80777 Aligning Tool.

ALIGNING PROCEDURE *(follow this order exactly)*

Intermediate Frequency Adjustments

Amplitude Modulation

The I.F. aligners that are used to adjust the amplitude modulation (AM) channel are found on the top side of the chassis. They consist of 6 adjustable iron cores used to tune the inductance of the 1st, 2nd and 3rd I.F. transformers (161202, 161200, 161201). These cores are found inside the plastic tubes protruding from the top of the I.F. transformers and are equipped with small screwdriver slots.

Caution: These cores are made of high quality R.F. iron and are fragile; therefore care must be used in adjusting them.

1. Connect the signal generator to the modulator grid, terminal number 8 of the 6SB7 converter tube which is connected to the wave band switch, and is identified by a blue dot.
2. Connect the output meter across the voice coil of the speaker (green and black wires from cable).
3. Adjust the signal generator to 455 KC. Use 30% modulation at 400 cycles.
4. Adjust volume control full on.
5. Adjust tone control to maximum high, minimum bass.
6. Adjust range switch to standard broadcast band, actuate any AM. push button.
7. Adjust the tuning selector to approximately 600 KC.
8. Adjust I.F. cores for maximum output with a reduced signal Input.

Frequency Modulation

The I.F. Aligners may be found from the underside of the chassis. The adjusters are 6 Iron cores used to tune the inductance of the high frequency coils.

1. Connect the signal generator to the modulator grid, terminal number 8 of the 6SB7 converter tube, which is connected to the wave band switch, and is identified by a blue dot.

2. Connect the electronic voltmeter to the junction of the 22,000 ohm and the 100,000 ohm resistors in the first limiter grid circuit identified by a green dot. This junction point will be found underneath the limiter shield.
3. Adjust the voltmeter to the lowest negative voltage scale.
4. Actuate push button on extreme right of row of eight.
5. Adjust the tuning selector to approximately 21 on this band.
6. Adjust the signal generator to 10.7 megacycles. No modulation is required.
7. Adjust the cores for maximum output of the voltmeter. Reduce the input signal and readjust until the maximum output is secured for minimum input. (Approximately 1 volt output).

Discriminator Alignment (FM)

Caution: ***Discriminator secondary must be zeroed at same generator setting used for FM I.F. alignment.***

1. Connect the signal generator to the grid of the second I.F. tube, terminal No. 4 of the 6SH7.
2. Connect the electronic voltmeter to the center of the diode load resistors at the point indicated by the orange dot.
3. Adjust the primary for maximum output with .1 volt from signal generator set at 10.7 megacycles.
4. Switch the electronic voltmeter to the high side of the diode load resistors, identified by a red dot.
5. Adjust the secondary for zero output.
6. Swing generator to 75 KC. higher and 75 KC. lower in frequency and note the plus and minus voltage. If these voltage values are not approximately equal, repeat operations 3, 4 and 5.

Dial Pointer Adjustment

Check dial pointer to see that it is aligned with the two diamond shaped markers at the extreme left of the dial scale, when the variable capacitor plates are completely engaged.

R.F. Adjustment—Amplitude Modulation

The Broadcast band should be adjusted first. The built-in loop should remain connected to the antenna and ground terminals.

1. Connect the signal generator to the AM antenna terminals leaving the loop antenna connected. A 400 ohm resistor must be used in series with the signal generator. Use of a 30% modulated signal of 400 cycles is recommended.
2. Adjust the signal generator to 1500 KC.
3. Adjust station selector to 1500 KC.
4. Adjust range switch to AM Broadcast. Actuate any AM push button.
5. Adjust the oscillator, R.F. and antenna trimmer for maximum output.
6. Reduce the input signal and readjust the trimmers until the maximum output is secured for minimum input.
7. Adjust station selector to 600 KC.
8. Set signal generator to 600 KC.
9. Adjust iron cores in oscillator, R.F. and antenna coils for maximum output.
10. Repeat 1500 KC. and 600 KC. alignments until no further change is required.

R.F. Adjustment—Short Wave (9-10 MC. Band)

The built-in loop should remain connected to the antenna and ground terminals.

1. Connect the signal generator to the antenna and ground terminals of the receiver using a 400 ohm resistor.
2. Set the dial pointer to 10 MC.
3. Adjust signal generator to 10 MC.
4. Actuate left S.W. push button.
5. Adjust oscillator, R.F., and antenna trimmer for maximum output. (No further alignment is required on this band.)

R.F. Adjustment—Short Wave (11.2-12.6 MC. Band)

1. Connect the signal generator to the antenna and ground terminals of the receiver using a 400 ohm resistor in series with the signal generator.
2. Set dial pointer to 12.4 MC.
3. Adjust signal generator to 12.4 MC.
4. Actuate right S.W. push button.
5. Adjust oscillator, R.F. and antenna iron cores for maximum output.

R.F. Adjustments—Frequency Modulation

Align the FM (2) Band first.

1. Set dial pointer to channel 90 (49 MC.)
2. Connect the signal generator to FM dipole terminals using 39 ohm resistors as indicated (disconnect dipole antenna). *Connect signal generator ground to chassis ground.*
3. Set signal generator to 49 MC.
4. Actuate FM (2) push button (extreme right hand button in row of 8 buttons).
5. Connect electronic voltmeter to the junction of the 22,000 and the 100,000 ohm resistors in the first limiter grid circuit (identified by green dot).
6. Adjust oscillator R.F. and antenna trimmers for maximum output on electronic voltmeter.

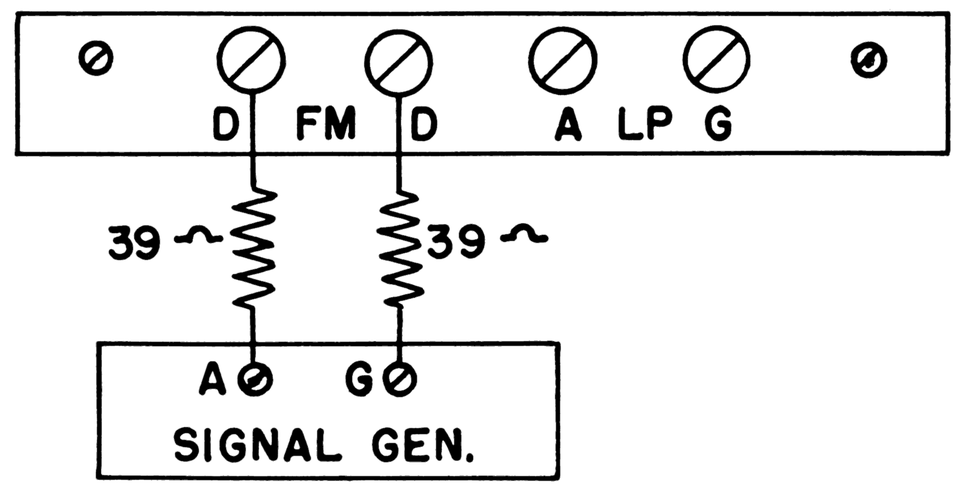

FM (1) Band

Adjust the same as the FM (2) band using 106 MC., setting the dial pointer to channel 290. Connect the generator to the dipole input using 39 ohm resistors as indicated. Actuate 3rd push button from right in row of 8 buttons. *Connect signal generator ground to chassis ground. Note reverse signal generator connection.*

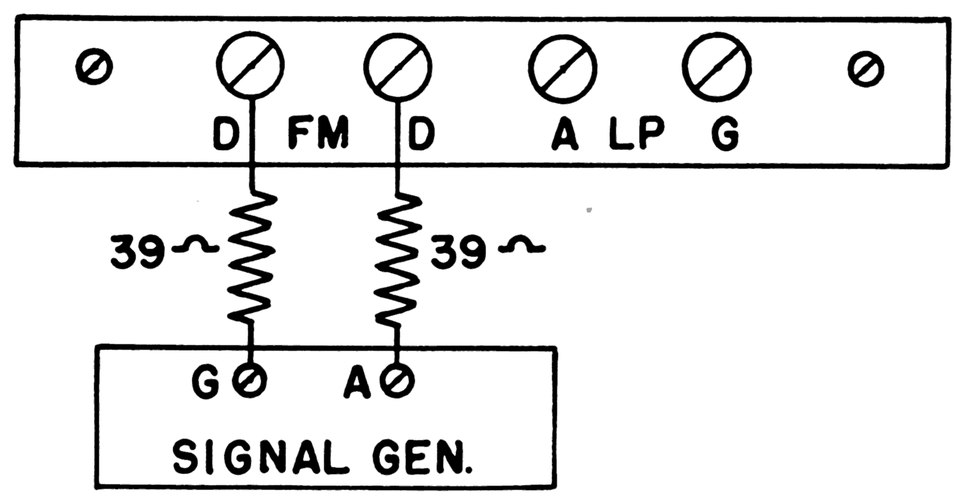

LOCATION CHARTS

TUBES, TRIMMERS AND VOLTAGE

Measurements are made at the 117 volt line, using electronic voltmeter. Except where otherwise indicated, voltages are D. C. and are positive with respect to the reference point which is the chassis.

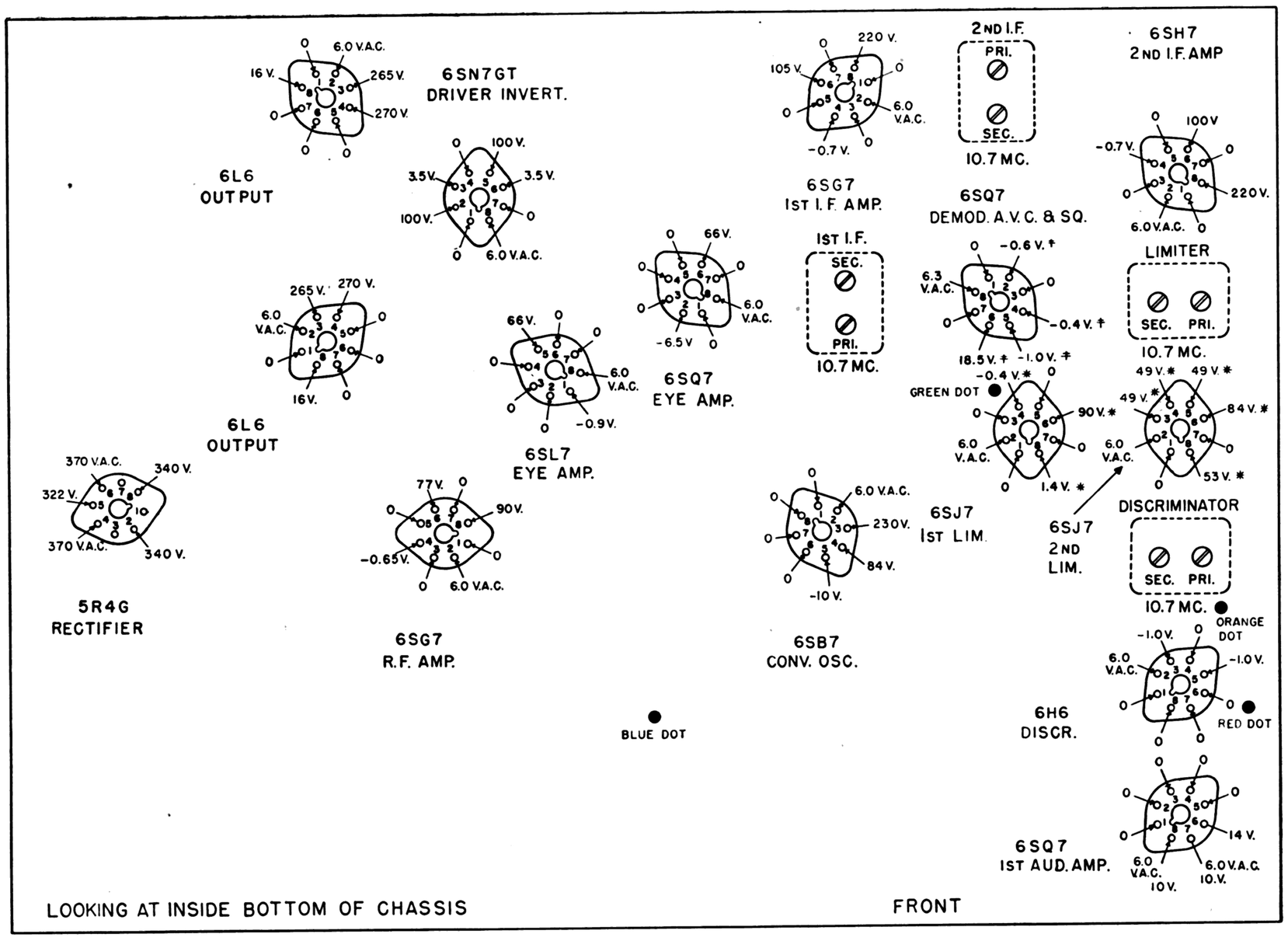

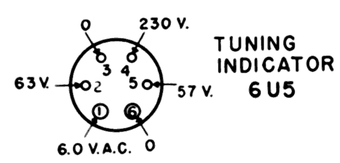

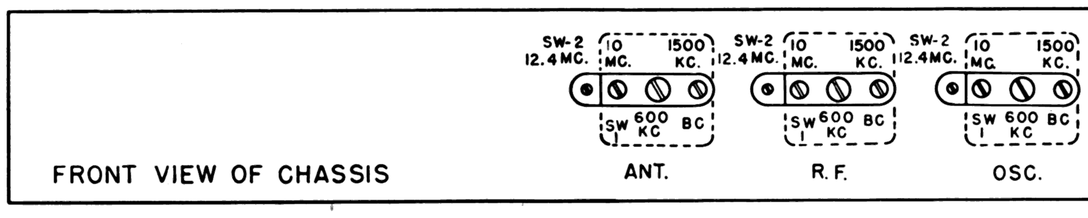

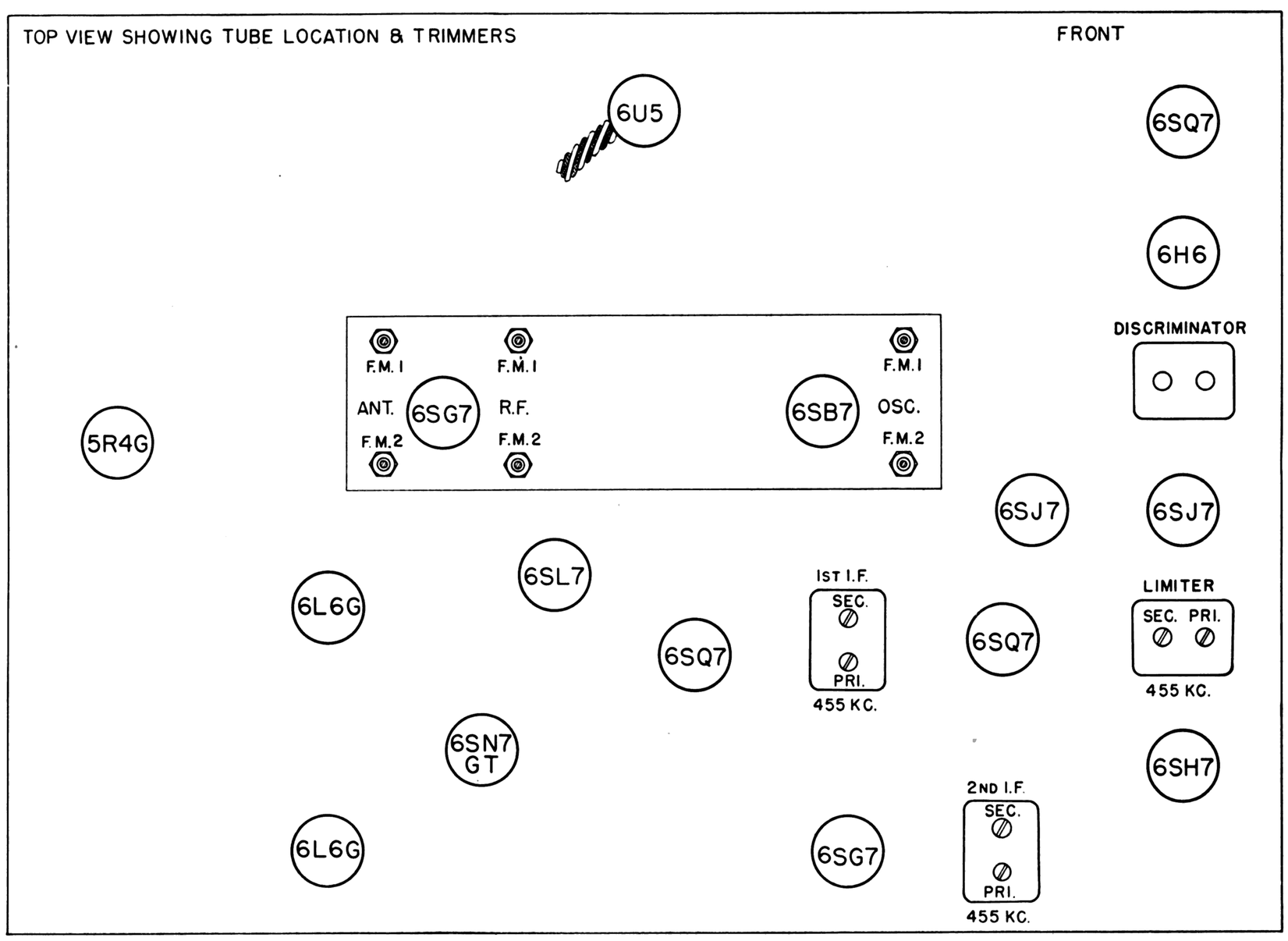

WIRING DIAGRAM

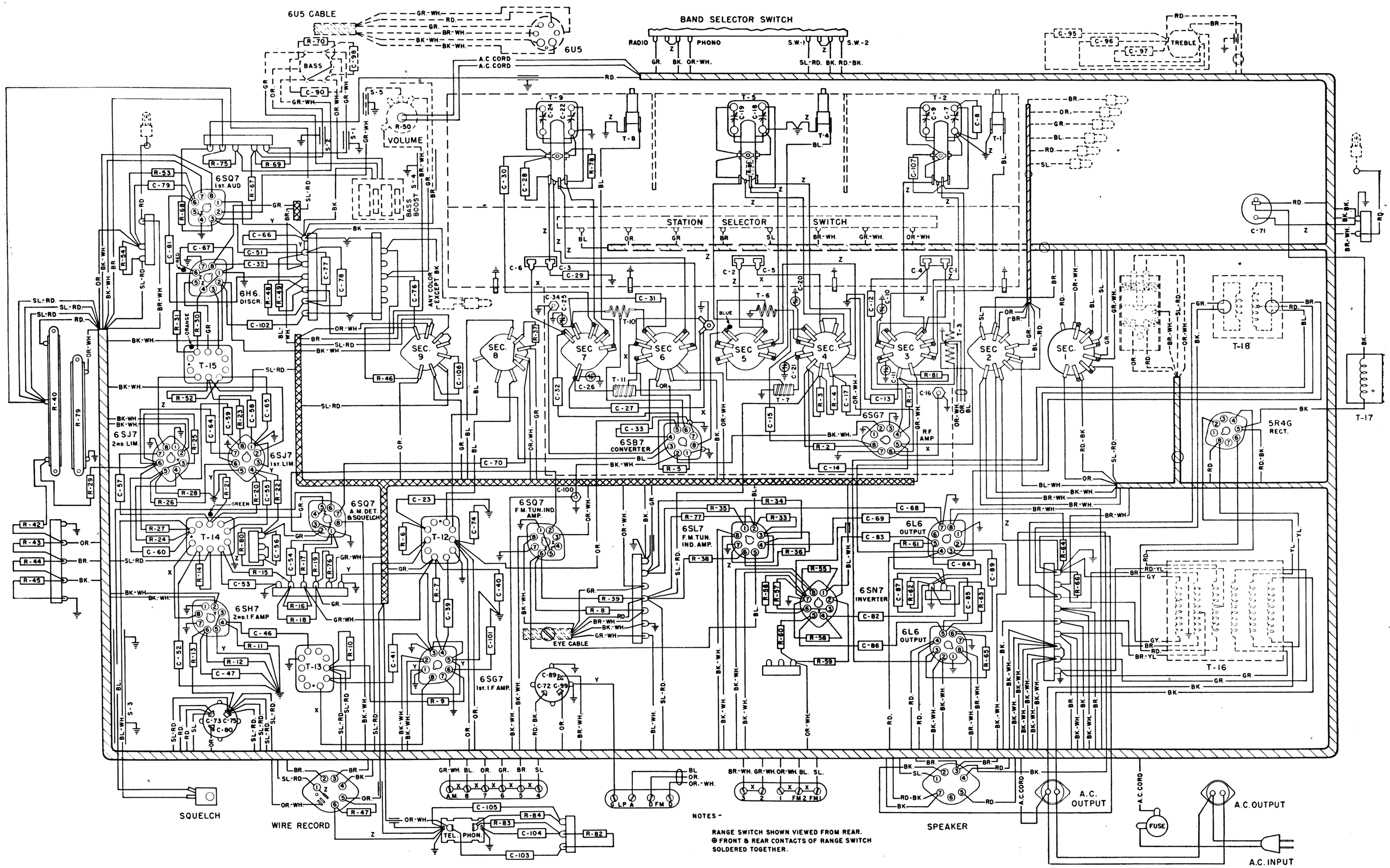

THE EXCLUSIVE STROMBERG-CARLSON COLOR

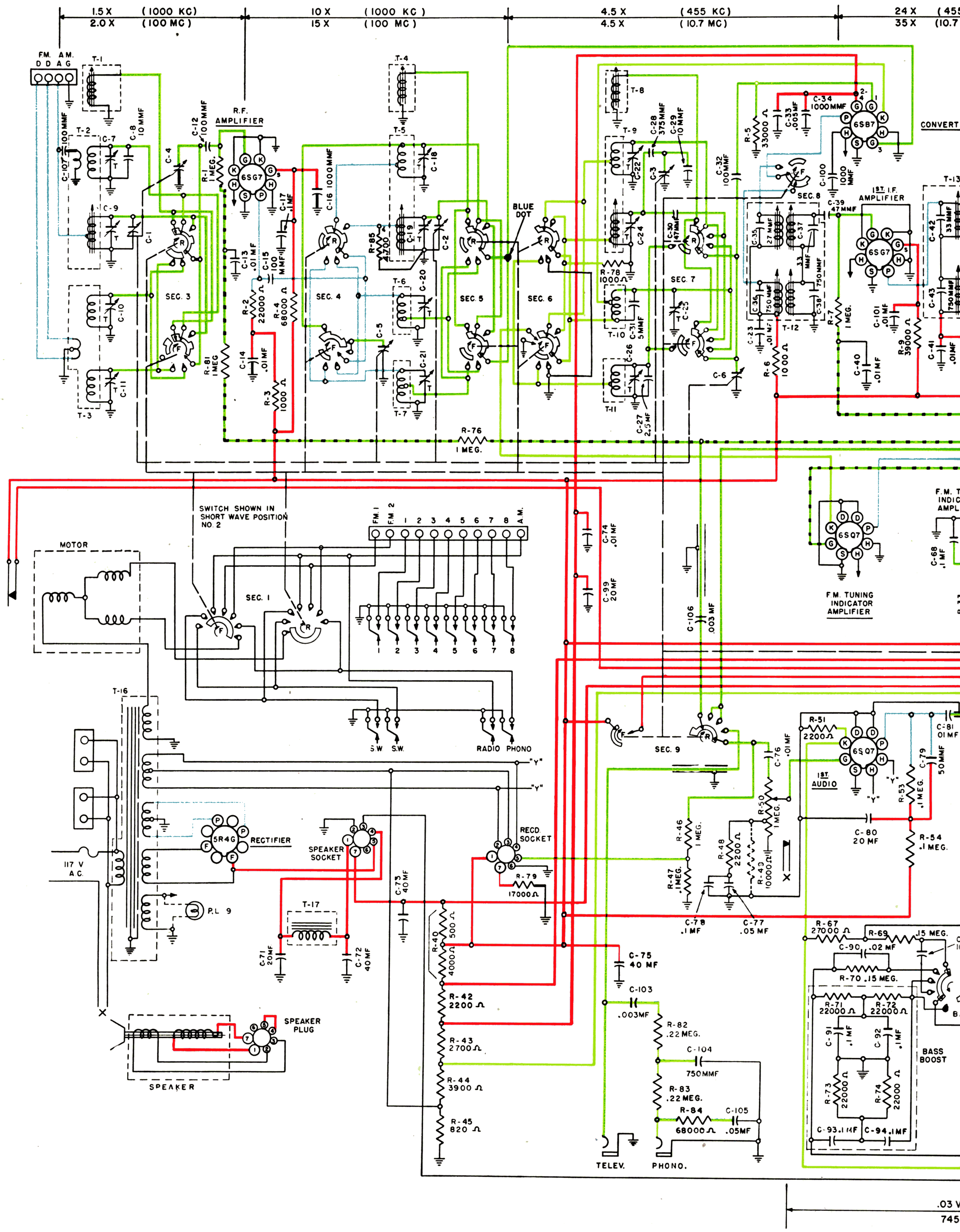

STROMBERG-CARLSON COLOR CODE SCHEMATIC

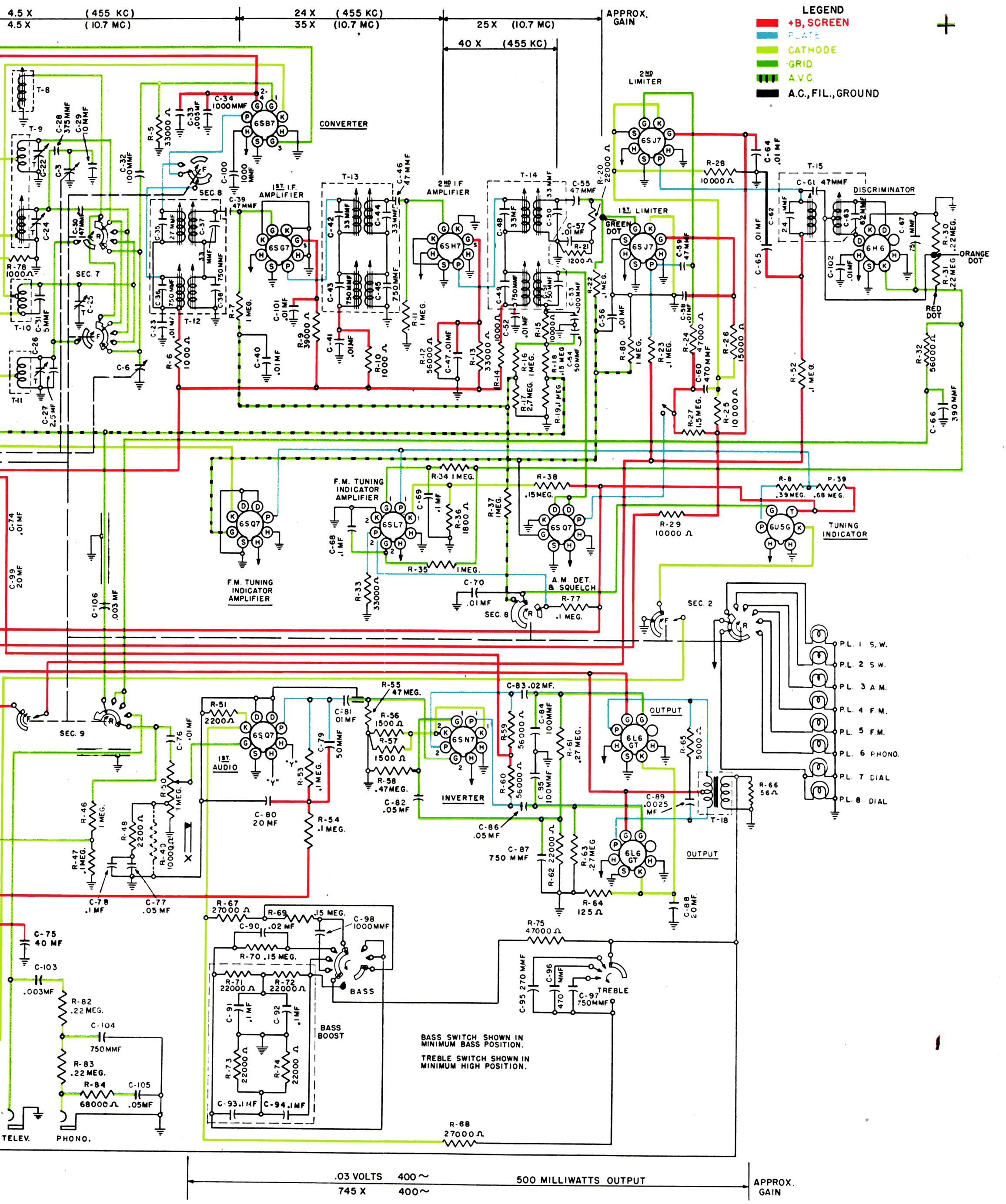

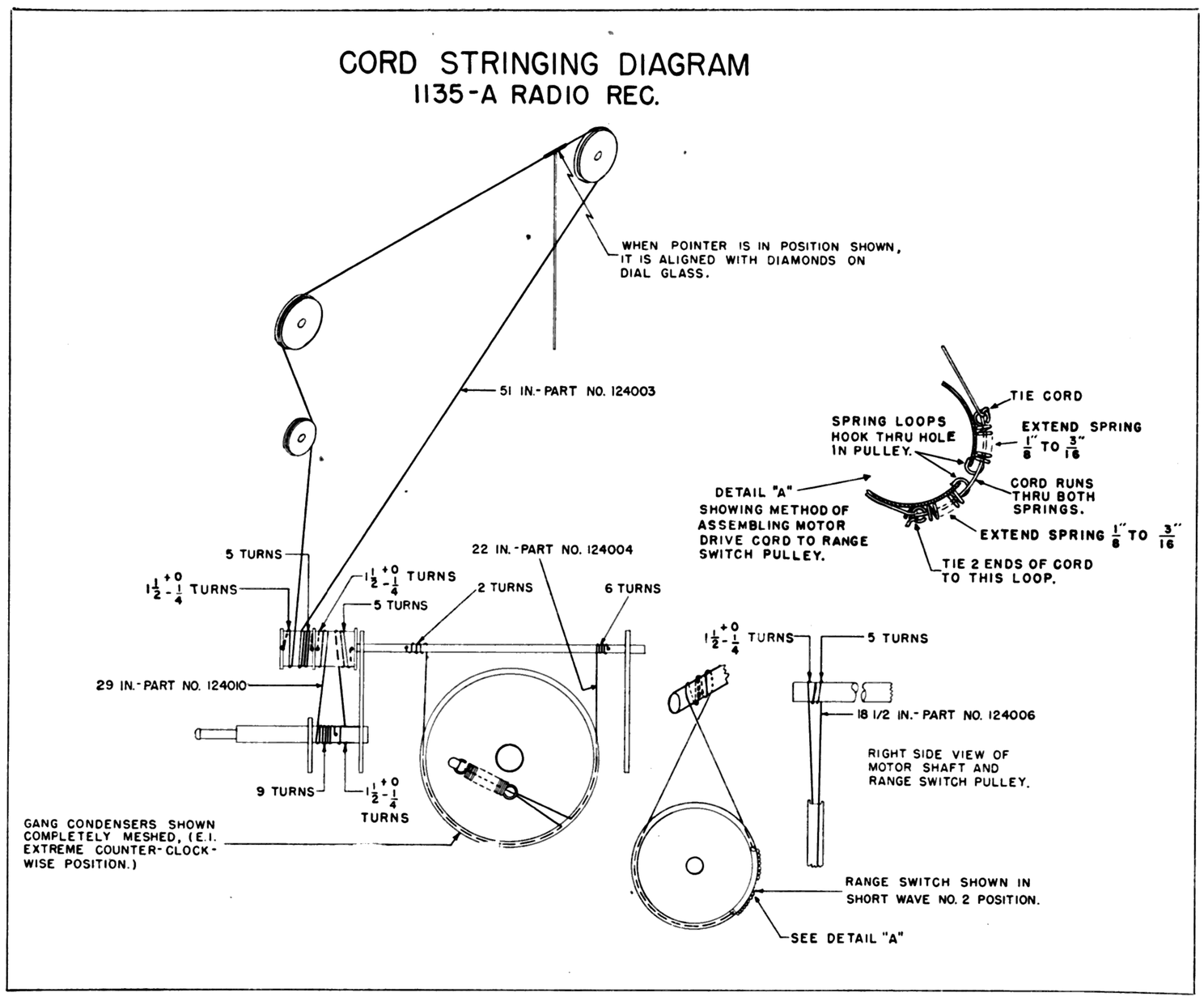

Cabinet Parts

PF		PL
29597	Labyrinth	29597
35852	Screws, Escutcheon Mtg.	35852
37083	Key Pull	37083
37139	Decal, Station	37139
37140	Decal Off-On, Volume	37140
37145	Lid Support	—
37149	Drawer Pull	39024
—	Grille Cloth—W—	37168
37169	Grille Cloth—M—	130017
37239	Socket, Phono. Compartment	—
37240	Lamp, Phono. Compartment	—
37242	Block, Lamp and Switch Mtg.	—
37579	Escutcheon	35726
38442	Bullet Catch with Strike	38442
39200	Piano Hinge	—
80681	Stop Hinge	80681
—	Phono. Drawer and Tracks	108035
108036	Phono. Panel	—
—	Phono. Drawer Track Right	132021
—	Phono. Drawer Track Left	132022
150024	Metal Grille	130023
801401	Lamp Cap, Bullseye	801401

Knobs—Push Buttons

Part No.	
32156	Push Button
32172	Lens, Push Button
32224	Off-On, Volume
35866	Call Letter Kit
37007	Indicator Lever, Tone
37093	Tuning
121007	"S.W." Push Button Tab
121008	"Radio" Push Button Tab
121009	"Record" Push Button Tab

Controls—Switches

Part No.		
37238		Phono. Compartment Switch
145002	R-50	1 Meg. Volume Control and Switch
158005		Tone Switch, Bass
158006		Tone Switch, Treble
158014		Squelch Switch
158019		Switch, S.W., Radio, Phono

Resistors

Part No.		
27407	R-20, R-62, R-71, R-72, R-73, R-74	22,000 Ohms
27640	R-18, R-69, R-70	.15 Meg.
28006	R-19, R-22, R-23, R-47, R-52, R-53, R-54, R-77, R-81	.1 Meg.
28157	R-45	820 Ohms
28158	R-3, R-6, R-10, R-14, R-78	1,000 Ohms
28159	R-21	1,200 Ohms
28160	R-56, R-57	1,500 Ohms
28161	R-36	1,800 Ohms
28162	R-48, R-51	2,200 Ohms
28170	R-15, R-25, R-28, R-29, R-49	10,000 Ohms
28172	R-26	15,000 Ohms
28174	R-67, R-68	27,000 Ohms
28175	R-13, R-33	33,000 Ohms
28176	R-9	39,000 Ohms
28177	R-24, R-75	47,000 Ohms
28178	R-12, R-32, R-59, R-60	56,000 Ohms
28179	R-4, R-84	68,000 Ohms
28183	R-30, R-31, R-82, R-83	.22 Meg.
28184	R-61, R-63	.27 Meg.
28186	R-8	.39 Meg.
28187	R-55, R-58	.47 Meg.
28189	R-39	.68 Meg.
28191	R-7, R-11, R-16, R-34, R-35, R-37 R-46, R-76, R-80	1 Meg.
28193	R-27	1.5 Meg.
28196	R-17	2.7 Meg.
145002	R-50	.1 Meg. Volume Control
149004	R-85	4,700 Ohms
149005	R-2	22,000 Ohms
149006	R-5	33,000 Ohms
149007	R-1	1 Meg.
149009	R-79	17,000 Ohms Voltage Divider
149010	R-40	500 Ohms, 4,000 Ohms Voltage Divider
149078	R-42	2,200 Ohms, 2 W
149164	R-66	56 Ohms, 1 W
149180	R-43	2,700 Ohms, 1 W
149182	R-44	3,900 Ohms, 1 W
149194	R-38	.15 Meg., 1 W
149207	R-65	5,000 Ohms, 5 W
149208	R-64	125 Ohms, 5 W

Capacitors

Part No.		
25150	C-90	.02 mf (400 V)
25484	C-83	.02 mf (600 V)
25485	C-13, C-14, C-23, C-40, C-47, C-52, C-56, C-57, C-58, C-64, C-65, C-70, C-74, C-76, C-81, C-102	.01 mf (600 V)
28325	C-17	.1 mf
29359	C-67	75 mmf
29559	C-89	.0025 mf
29891	C-86	.05 mf (600 V)
34796	C-54, C-79	50 mmf
34800	C-53, C-84, C-85	100 mmf
40632	C-77, C-82, C-105	.05 mf (400 V)
46315	C-103, C-106	.003 mf (400 V)
110006	C-11, C-20, C-21, C-25, C-26	R.F. Trimmer H.F.
110007	C-10	Antenna F.M. H.F. Trimmer
110201	C-36, C-38, C-43, C-45, C-49, C-51	750 mmf
110202	C-8	10 mmf
110203	C-28	375 mmf
110208	C-95	270 mmf
110209	C-60, C-96	470 mmf
110215	C-87, C-97, C-104	750 mmf
110216	C-66	390 mmf
110401	C-12, C-15, C-32, C-107	100 mmf
110402	C-30, C-39, C-41, C-46, C-55, C-59, C-61, C-101	47 mmf
110403	C-62	24 mmf
110406	C-63	62 mmf
110407	C-37, C-42, C-44, C-48, C-50	33 mmf
110408	C-16, C-34, C-100	1,000 mmf
110410	C-35	27 mmf
110411	C-29	10 mmf
110412	C-27	2.5 mmf
110413	C-31	5 mmf
110415	C-68, C-69, C-78, C-91, C-92, C-93, C-94	.1 mf
110417	C-98	1,000 mmf Ceramic
110419	C-33	.005 mf
111005	C-73, C-75, C-80	40 mf, 4 mf, 20 mf, Electrolytic
111006	C-71	20 mf, Electrolytic
111007	C-72, C-88, C-99	40 mf, 20 mf, 20 mf, Electrolytic

Miscellaneous

Part No.	
25156	Fuse
27958	Fuse Holder
28694	Socket, Pilot
29956	Pilot Lamp
30152	Socket, Speaker
30269	Corner Mtg., Dial Scale
31539	Jack, Phono
32075	Pulley
32076	Pulley
33218	Cord, A.C.
34068	Cable and Socket, Eye
40546	Clip, Pulley
113002	Clip, Tube Ground
118001	Iron Core, I.F.
118002	Iron Core, R.F.
122009	Dial Scale
124003	Cord, Pointer
124004	Drive Cord, Condenser Gang
124006	Drive Cord Assembly, Motor
124010	Drive Cord, Selector
138002	Lens, Phono
138005	Lens, Range
144003	Pointer, Dial
145002	Volume Control
147002	Pulley Assembly, Band Switch
150004	Shaft Assembly, Dial and Pulley Drive
150005	Shaft, Knob Drive
151035	Shield, Pilot Lamp
152002	Socket, Tube (10)
152004	Socket, Recorder
152007	Socket, Pilot Bullseye
152014	Socket, Tube (3)
152026	Socket, A.C.
158019	Switch Assembly, SW, Radio, Phono.
159002	Binding Post, Ant.
159008	Binding Post, 6 pt.
159009	Binding Post, 5 pt.
167009	Bass Boost
80891	Phono. Cartridge Qtm.
80892	Metal Needle for 80891
80894	Jewel Needle for 80891

Coils—Transformers—Speaker

Part No.		
32460		Speaker Cone
*112008		R.F. Chassis Assembly
114003	T-5	R.F. Coil SW-1 Broadcast
114004	T-9	Oscillator Coil SW-1 Broadcast
114005	T-2	Antenna Coil SW-1 Broadcast
114020	T-1, T-4, T-8	Antenna, R.F., Oscillator, Coil S.W. Band (2)
114317	T-15	Discriminator Transformer
140001		Motor, Switch Drive
155019		Speaker Assembly
161002	T-17	Filter Choke
161200	T-13	2nd I.F. Transformer
161201	T-14	3rd I.F. Transformer
161202	T-12	1st I.F. Transformer
161206	T-18	Output Transformer
161403	T-16	Power Transformer

*Band Switch, Sockets, Variable Capacitor, R.F. Coils all bands. This is a complete R.F. Assembly. Sold as a unit only.

NOTE—When ordering replacement parts always specify series number as well as model and part number. Series number is stamped on back of chassis.

Printed in the U. S. A.