STROMBERG-CARLSON SERVICE NOTES

AC-DC RADIO RECEIVER NO. 1204

SERIES NO. 10—11

IDENTIFICATION TABLE

MODEL	CHASSIS	CABINET	SPEAKER
HI	112021	108056	155030
HB	112021	108044	155030
HME	112021	108063	155030
HMG	112021	108062	155030

SPECIFICATIONS

Voltage Rating.....105-125 Volts AC-DC
Type of Circuit.....Superheterodyne
Tuning Range.....A.M.—540 KC.—1600 KC.
F.M.—88 MC.—108 MC.

Number & Type of Tubes—7

3—12BA6..... R.F. Amp. and two I.F. Amp.
1—12BE6.....Convertor
1—6AQ6.....1st Audio Amp.—A.M. Det. & AVC
1—12H6..... F.M. Det.
1—50L6GT.....Power Output

Input Power Rating..... 40 Watts
Intermediate Frequency.....A.M. 455 KC. F.M. 10.7 MC.
Speaker Voice Coil Impedance (PM).....3 Ohms
Power Output.....1.25 Watts at less than 10% distortion

ALIGNMENT PROCEDURE 1204

	Band and Pointer Setting	*Generator Setting*	*Input and Dummy*	*VTVM Connection and Scale*	*Trimmer Adj. and Notes*
			A.M. I.F. ALIGNMENT		
(1)	AM-Pointer near middle of dial	455 kc. 400 cy. mod.	Junction C-13, 6 and L-8 200 mmf. dummy	Junction C-31, 35 3VDC scale	Adj. Pri. and Sec. cores two AM IF transformers top of chassis. Highest voltage
			F.M. I.F. ALIGNMENT		
(1)	FM-Pointer near middle of dial	10.7 mc 400 cy mod.	Junction C-10, 16 and L-3	AVC buss (Green and White Wire) —3VDC scale	Detune Sec. Ratio Det. Transformer adjust four FM IF cores, bottom of chassis, in following order counting from band switch—One, Four, Two Three for highest voltage. DO NOT REPEAT
(2)	"	"	"	"	Adjust Pri. Ratio Det. Transformer for highest voltage.
(3)	"	"	"	Center terminal audio switch —3 VDC scale	Adjust Sec. Ratio Det. Transformer for ZERO voltage.
(4)	Repeat (2) and (3)				
			A.M. R.F. ALIGNMENT		
(1)	AM-600 kc	600 kc 400 cy. mod.	Loop and link connected 200 mmf dummy to Ant. terminal	Junction C-31, 35 —3 VDC scale	Adjust C-12, 6 and 1 for highest voltage.
(2)	AM-1600 kc Repeat (1) and (2)	1600 kc	"	"	Align L-8, 11 for highest voltage.
			F.M. R.F. ALIGNMENT		
	FM Pointer at 98 to 100 mc.	98 to 100 mc. 400 cy mod.	"	AVC buss (Green and White Wire) —3 VDC scale	Adjust C-7, 10 and core L-6 and 7 for highest voltage.

WITH THE EXCLUSIVE STROMBERG-CARLSON COLOR CODE SCHEMATIC

THE EXCLUSIVE STROMBERG-CARLSON COLOR CODE SCHEMATIC

SCHEMATIC DIAGRAM
RADIO RECEIVER–1204

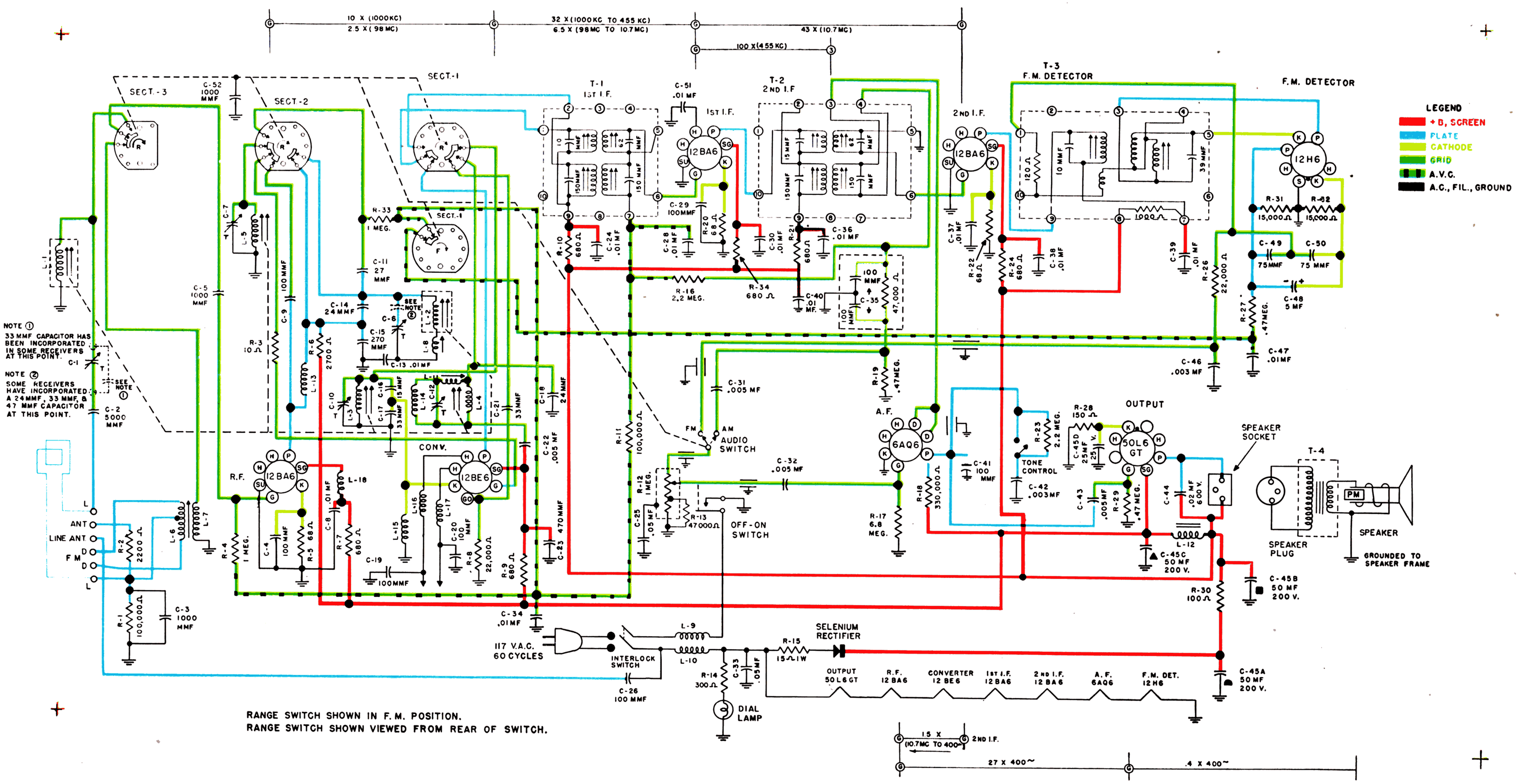

RANGE SWITCH SHOWN IN F.M. POSITION.
RANGE SWITCH SHOWN VIEWED FROM REAR OF SWITCH.

Voltage and Tube Location Chart

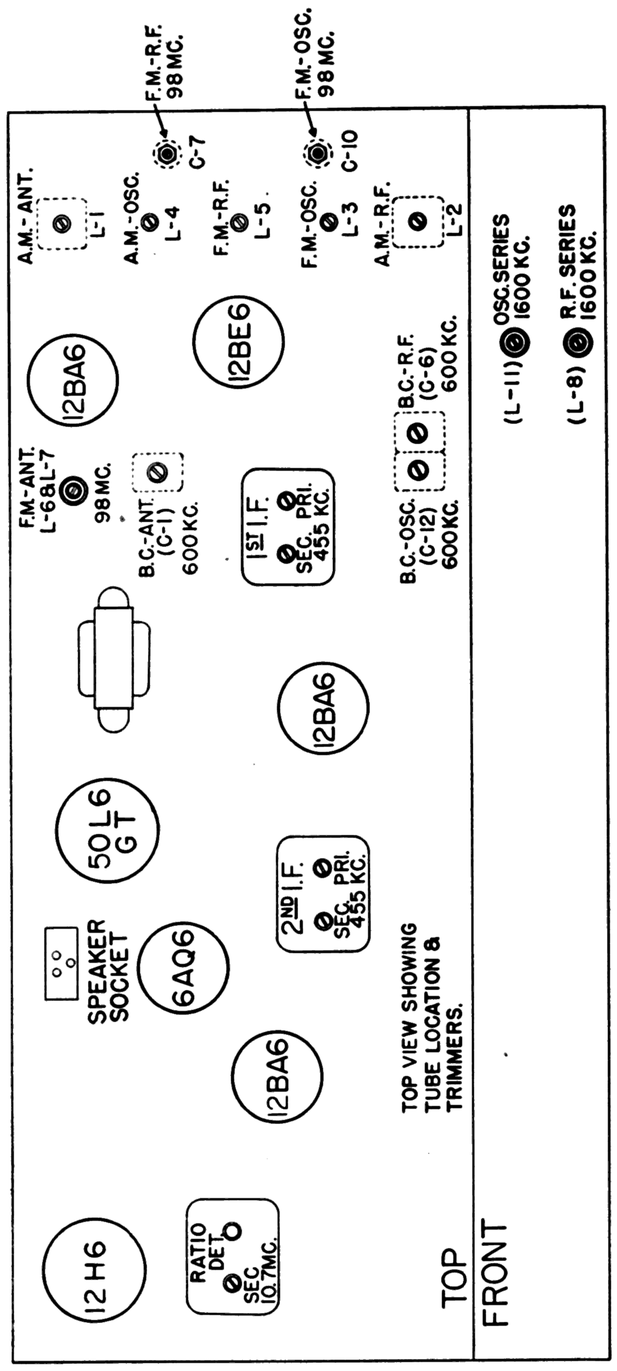

Measurements are made at 117V line, using electronic Voltmeter. Except where otherwise indicated, voltages are D.C. and are positive with respect to the reference point which is the chassis.

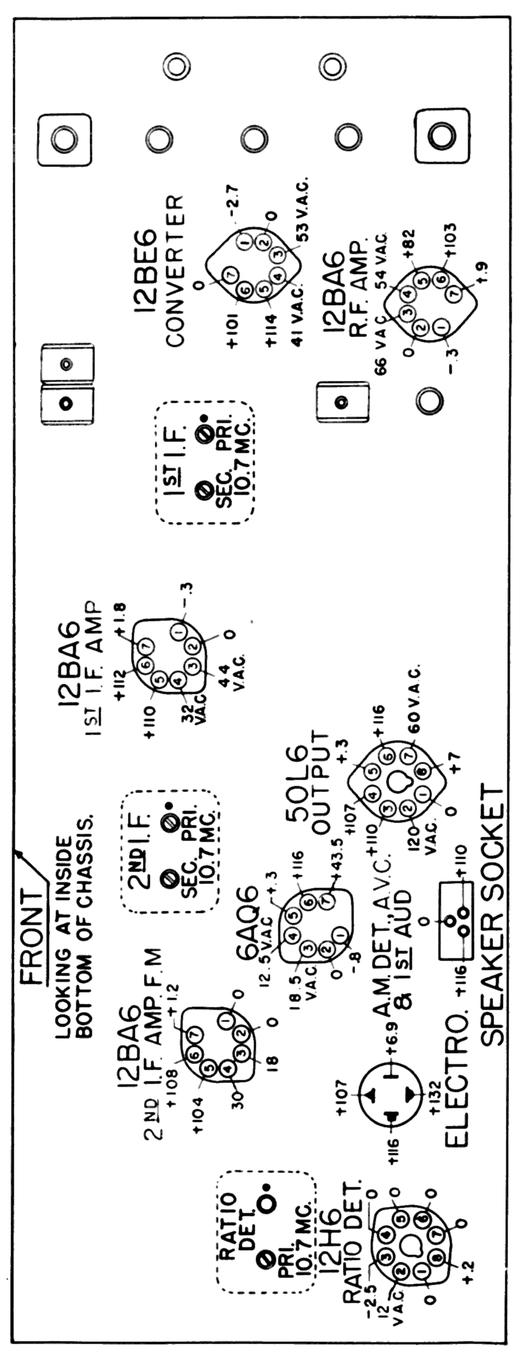

Dial Stringing Chart

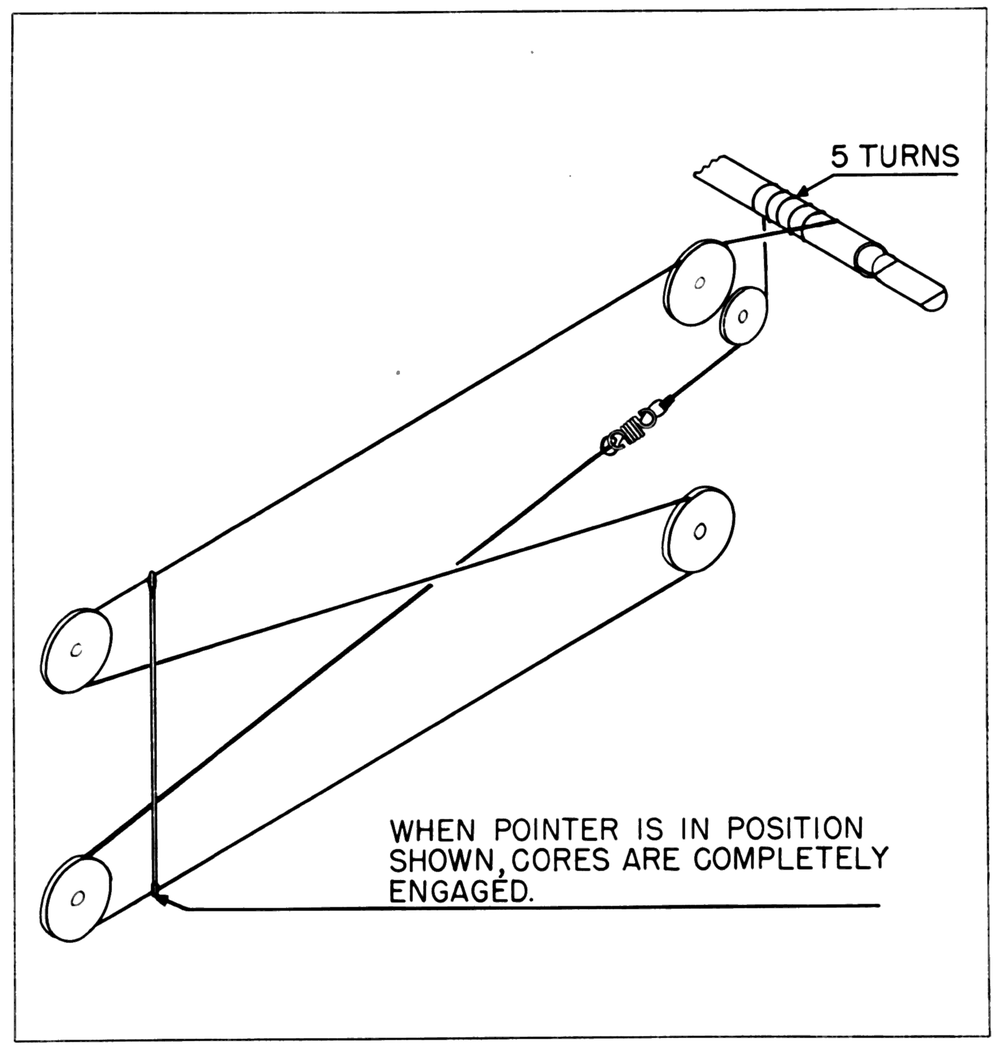

Cabinet Parts

	HB	HI	HME	HMG	
108044	X				Cabinet
108056		X			Cabinet
108062				X	Cabinet
108063			X		Cabinet
122015	X	X			Dial
122021			X	X	Dial
125019			X	X	Escutcheon
130029	X				Grille Cloth Assem.
130037		X			Grille Metal
138014	X	X			Lens
138015			X	X	Lens
139013	X	X			Loop and Back Assem.
139019	X	X	X	X	Loop and Back Assem.
154030	X	X	X	X	Fibre Knob Spacer
508051	X	X	X	X	Screw, Chassis to cabinet

REPLACEMENT PARTS

Resistors

28144	R-5, 20, 22	68 Ohms
28156	R-7, 9, 10, 21, 24, 34	680 Ohms
28162	R-2	2200 Ohms
28163	R-6	2700 Ohms
149089	R-3	10 Ohms
149109	R-8, 26	22000 Ohms
149111	R-13	47000 Ohms
149113	R-1, 11	0.1 Meg.
149116	R-18	0.33 Meg.
149117	R-19, 27, 29	0.47 Meg.
149119	R-4, 33	1.0 Meg.
149121	R-16, 23	2.2 Meg.
149124	R-17	6.8 Meg.
149167	R-30	100 Ohms 1W
149168	R-28	150 Ohms 1W
149219	R-15	15 Ohms 1W (Glasohm)
149229	R-14	300 Ohms 1W
149250	R-31,32	15000 Ohms 5%

Capacitors

25484	C-44	.02-600V
29891	C-25,33	.05-600V
110017	C-6, 12	Trimmer
110024	C-1	Trimmer
110025	C-7, 10	Trimmer
110208	C-15	270 mmf
110403	C-14, 18	24 mmf
110407	C-17	33 mmf
110419	C-22, 31, 32, 43	.005-500V
110420	C-8, 13, 24, 28, 30, 34, 36, 37, 38, 39, 40, 47, 51	.01-500V
110425	C-3, 5, 52	1000 mmf
110451	C-4, 9, 19, 20, 26, 29, 41	100 mmf
110455	C-23	470 mmf
110468	C-16	15 mmf
110478	C-35	Diode filter, Includes 47000 Ohms resistor
110483	C-49, 50	75 mmf.
110485	C-11	27 mmf.
110486	C-21	33 mmf.
110488	C-42, 46	.003-500V
110491	C-2	5000 mmf.
111027	C-45a, b, c, d	3-50 MF 200V, 1-25 MF 25V
111030	C-48	5 MF

Transformers—Coils

114029	L-5	RF Tuning Coil F.M.
114036	L-6 and 7	Ant. Coil F.M.
114041	L-1, 2, 4	Ant., RF, Osc Tuning Coils A.M.
114042	L-3	Osc. Tuning Coil F.M.
114043	L-11	Osc. Coil, A.M. Aligning
114044	L-8	RF Coil, A.M. Aligning
114045	L-14	Osc. Coil, A.M. Shunt
114311	T-1	1st I.F. transformer
114323	T-2	2nd I.F. transformer
114616	L-9 and 10	Ant. choke coil
114620	L-13, 15	R.F. choke
114621	L-16, 17	Heater choke
114622	L-18	R.F. choke
161004	L-12	Filter choke
161228	T-3	Ratio Detector Transformer
161410	T-4	Output Transformer

Controls—Switches—Knobs

134031	Knob Assem. (dot)	HB
134032	Knob Assem (no dot)	HB
134046	Knob Assem. (dot)	HI
134047	Knob Assem. (no dot)	HI
134050	Knob Assem.	HMG
134051	Knob Assem.	HME
145031	R-12	1 Meg. Volume Control and Switch
158016		Range Switch
158017		Tone Control Switch
158018		Interlock Smitch
158028		Audio Switch (A.M.-F.M.)

Miscellaneous

31969	Dial Pointer
32046	Speaker Socket
32164	Speaker Plug
33218	A.C. Cord
124012	Dial Drive Cord Assem.
142026	Dial Plate Assem.
147016	Range Switch Hub
151021	Miniature Socket
151036	Converter Tube Shield
152014	Octal Socket
152037	Miniature Socket, Converter Tube
155006	Speaker Cone
155029	Speaker—Less Transformer
155030	Speaker, Complete
156032	Tube Hold-down Spring
162058	Selenium Rectifier
164004	Tuning Unit (Mechanical Assem.)
165007	Connector, Range Switch to Audio Switch

NOTE—When ordering replacement parts always specify series number as well as model and part number. Series number is stamped on back of chassis.

PRINTED IN U.S.A.