Service Notes
Stromberg-Carlson No. 935 and 1035 Radio Receivers

STROMBERG-CARLSON COMPANY
Rochester 3, New York

IDENTIFICATION TABLE

Model	Input Power Frequency	Chassis	Cabinet	Speaker	Phonograph Equipment
935-M	50-60 cycles	33842	33950	33963	Use a Stromberg-Carlson Record Player
935-PF	50-60 cycles	33842	34075	33963	33989
935-PL	50-60 cycles	33842	34090	33963	34066
935-PR	50-60 cycles	33842	34077	33963	33989

SPECIFICATIONS

Tuning Ranges ---------- Standard Broadcast 540 to 1600 Kilocycles; Short Wave 8.8 to 12 Megacycles; Short Wave 14.4 to 18 Megacycles; Frequency Modulation 42 to 50 Megacycles

Voltage Rating ---------- 105 to 125 Volts

Type of Circuit ---------- Superheterodyne with Automatic Tuning and Electromatic Range Shift

Number of Tubes—16

- 1—6AB7 or 6SG7 R. F. Amplifier
- 1—6AC7 or 1—7V7 Modulator
- 1—6SA7 Oscillator
- 1—6AB7 or 6SG7 1st I. F. Amplifier
- 1—6AC7 2nd I. F. Amplifier
- 1—6SJ7 1st Limiter
- 1—6SJ7 2nd Limiter
- 1—6H6 Discriminator
- 1—6SQ7 or 6SQ7GT A. M. Detector, F. M. "Q"
- 1—6SQ7 or 6SQ7GT 1st Audio Amplifier
- 1—6SC7 Driver and Inverter
- 1—6U5 Tuning Indicator
- 1—6SC7 F. M. Tuning Ind. Amplifier
- 2—6L6G Power Output
- 1—5U4G Rectifier

Input Power Rating ---------- 935-M: 205 Watts; 935-PF, PL, PR.: 235 Watts

Intermediate Frequency ---------- 455 Kilocycles (Amplitude Modulation); 4.3 Megacycles (Frequency Modulation)

Speaker Field Coil Resistance ---------- 345 Ohms

Speaker Voice Coil Impedance ---------- 10 Ohms

Power Output ---------- 19 Watts at 10% Distortion

ALIGNING INFORMATION

Never Realign Unless Absolutely Necessary

GENERAL. All aligning adjustments are carefully made at the factory with special equipment which is designed for aligning Frequency Modulation receivers. The limitations of commercial oscillographs and other ordinary test equipment are such that alignment should not be attempted in the field unless absolutely necessary.

If alignment is attempted, it will not be successful unless the instructions which follow are adhered to exactly.

The following equipment will be required:

1. Standard signal generator.
2. F. M. signal generator with wide band sweep circuit.
3. Oscillograph.
4. Volt ohmyst or equivalent.

ALIGNING PROCEDURE (AMP. MOD.)

I. Intermediate Frequency Adjustments (A. M.)

1. Set the range switch to standard broadcast position.
2. Tune set to 1000 kc.
3. Connect the ground terminal of the signal generator to the ground terminal of the chassis.
4. Introduce a modulated signal of 455 kilocycles to the grid of the modulator tube, using a 0.1 mf. Capacitor in series with the output lead of the signal generator.
5. Adjust the following I. F. aligners for maximum output.
   - A. Secondary of second I. F. transformer.
   - B. Primary of second I. F. transformer.
   - C. Secondary of first I. F. transformer.
   - D. Primary of first I. F. transformer.
   - E. Tertiary of first I. F. circuit.

II. Radio Frequency Adjustments (A. M.)
Standard Broadcast Range (A Band)

1. Replace the 0.1 mf. capacitor in series with the output lead of the signal generator with a 200 mmf. capacitor and connect it to the antenna terminal of the chassis. Be sure loop antenna is plugged in.
2. Set the signal generator frequency and the receiver tuning dial to 600 kc.
3. Set the range switch to the standard broadcast range (A Band).
4. Adjust the 600 kc. oscillator and R. F. aligners (iron cores) for maximum signal.
5. Set the signal generator frequency and the receiver tuning dial to 1500 kc.
6. Adjust the 1500 kc. oscillator, R. F. and antenna aligning capacitors for maximum signal.
7. Repeat operations five and six.

1st Short Wave Spread Band (Red)

1. Replace the 0.1 mf. capacitor in series with the output lead from the signal generator with a 400 ohm carbon type resistor and connect it to the antenna terminal of the chassis.
2. Ground the F. M. dipole terminal which is nearest the ground binding post.
3. Switch to Red Band.
4. Set the signal generator frequency and the receiver tuning dial to 12 megacycles.
5. Adjust the oscillator R. F. and antenna aligning capacitors for maximum signal.

6. Set pointer to 9.0 megacycles on dial and adjust oscillator, R. F. and antenna iron cores for a maximum.

7. Repeat operations 3, 4 and 5.

2nd Short Wave Spread Band (Green)

1. Leave the signal generator connected in the same manner.

2. Switch to Green Band.

3. Set the signal generator frequency and the receiver tuning dial to 17 megacycles.

4. Adjust the oscillator, R. F. and antenna trimmers for maximum signal.

ALIGNING PROCEDURE (FREQ. MOD.)

I. Intermediate Frequency Adjustments (F. M.)

Note: All I. F. adjustments are made using a wide band sweep signal generator with a sweep circuit of plus or minus 300 kilocycles.

1. Switch to F. M. band.

2. Tune the set to the extreme high frequency end of the dial (50 megacycles).

3. Connect a volt ohmyst or equivalent between ground and terminal 6 of the 6SQ7 "Q" tube socket.

4. Connect the oscillograph between same points as Volt Ohmyst.

5. Connect the ground terminal of the wide band sweep signal generator to the ground terminal of the 6AC7 second I. F. tube socket.

6. Introduce a signal of 4.3 megacycles to the grid of the 6AC7 second I. F. tube socket (terminal No. 4), using a 0.1 mf. capacitor in series with the output lead of the signal generator. Maintain a reading of about two volts on the Volt Ohmyst.

7. Adjust the secondary and primary of the third I. F. transformer for maximum reading.

8. Connect the output lead of the wide band sweep signal generator and the 0.1 microfarad capacitor in series with it to the grid of the first I. F. tube socket terminal No. 4.

9. Connect the ground lead of the signal generator to the ground terminal of the first I. F. tube socket.

10. Adjust the second I. F. transformer in the same manner.

11. Connect the output lead of the wide band sweep signal generator with the 0.1 microfarad capacitor in series with it to the grid of the Modulator tube.

12. Adjust the first I. F. transformer in the same manner.

II. Discriminator Adjustment (F. M.)

1. Connect the ground terminal of the standard unmodulated signal generator to the ground terminal of the first I. F. tube socket.

2. Connect the output lead of the unmodulated standard signal generator to the grid of the first I. F. tube (terminal No. 4) using a 0.1 microfarad capacitor in series with the output lead of the standard signal generator.

3. Place "Q" switch in position where white dot does not show.

4. Ground terminal 8 of 6H6 socket.

5. Connect the Volt Ohmyst across one half of the discriminator load (from ground to the junction of the two .1 megohm resistors R-66 and R-67.

6. Set the attenuator of the standard signal generator for maximum output.

7. Adjust the primary of the discriminator transformer for maximum reading.

8. Connect the volt ohmyst across the whole discriminator load (from ground to the junction of R-66, 0.1 megohm resistor and C-70 .04 mf. capacitor).

9. Adjust the secondary of the discriminator transformer for center "O" reading.

10. Vary the frequency of the standard signal generator making sure that the voltage peaks, which should be of the same magnitude, are the same number of kilocycles off on either side of resonance. Any departure from these conditions may be corrected by a slight readjustment of the primary.

11. Remove ground from terminal 8 of 6H6 tube socket.

Radio Frequency Adjustments (F. M.)

1. Set the signal generator frequency and the receiver tuning dial to 48.5 megacycles.

2. Connect a wire between the ground binding post and the nearest F. M. dipole connection.

3. Replace the 0.1 microfarad capacitor in series with the output lead from the signal generator with a 100 ohm resistor and connect it to the other F. M. terminal on the back of the chassis.

4. Connect Volt Ohmyst between ground and terminal No. 6 of the 6SQ7, "Q" tube socket.

5. Adjust the oscillator aligner (Air trimmer) for maximum signal.

6. Adjust the R. F. and antenna aligners for maximum signal.

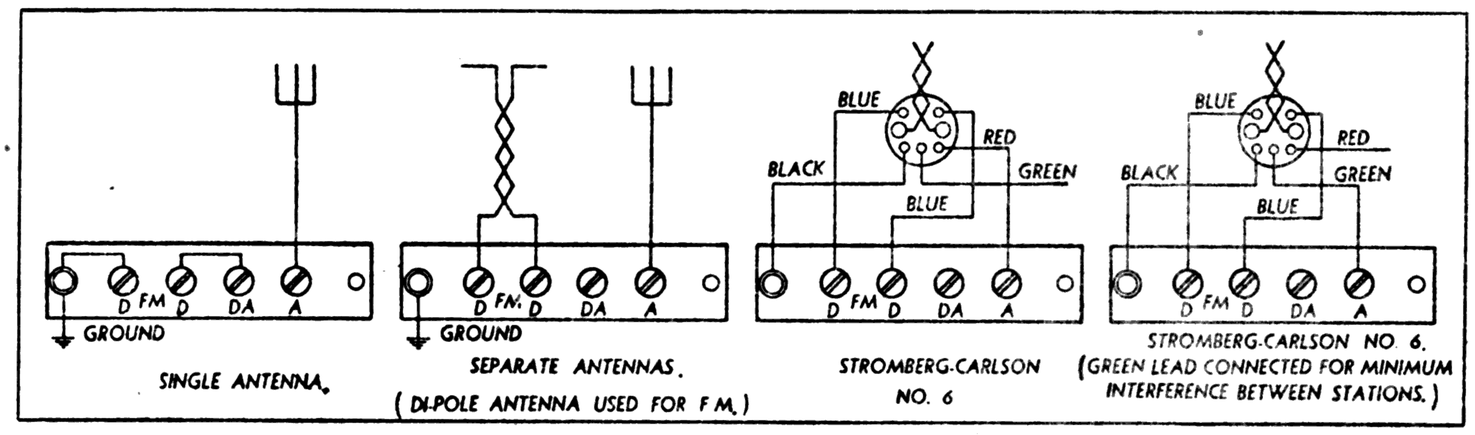

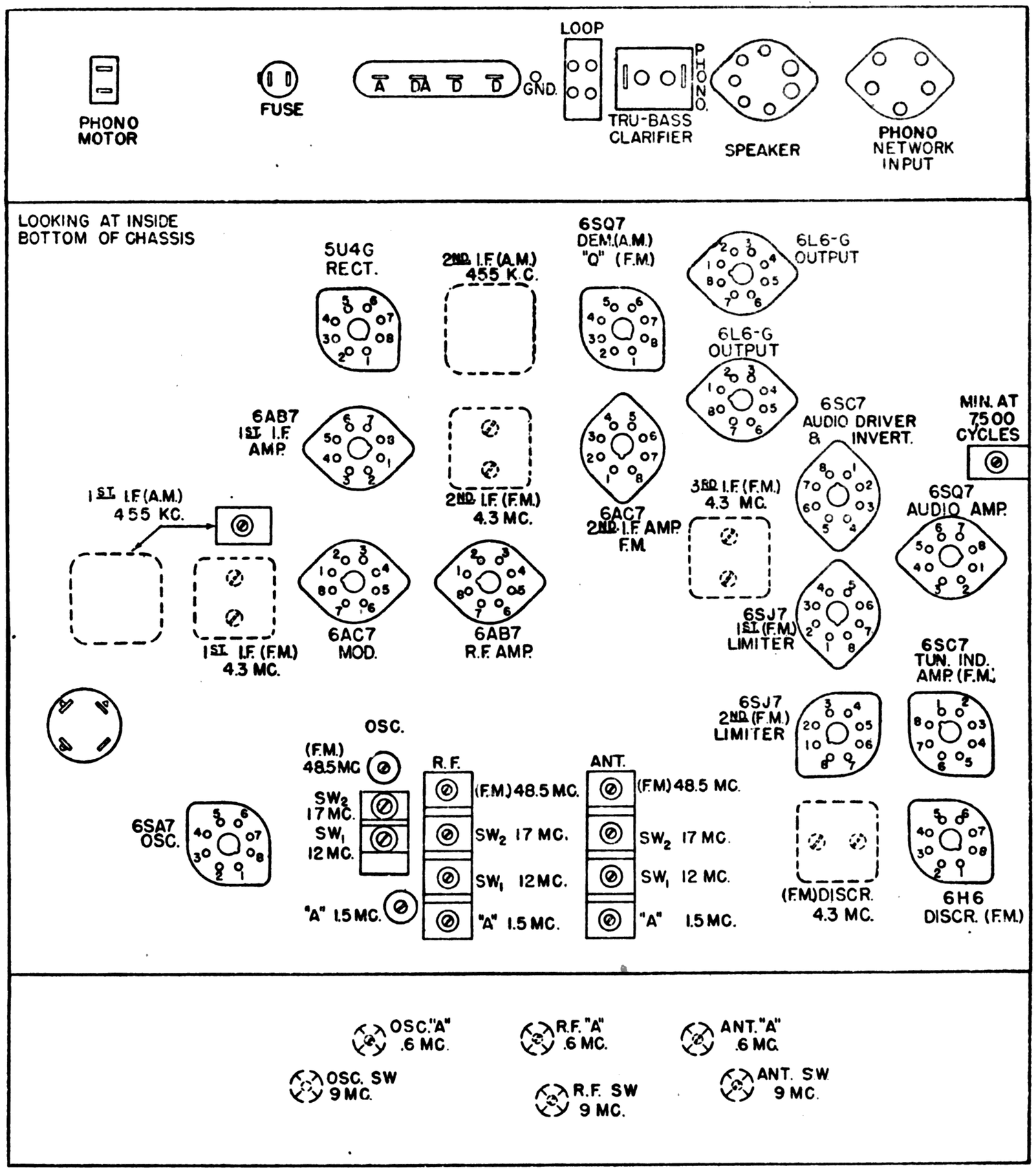

Location Chart

NORMAL VOLTAGE READINGS

NOTE: These receivers use either a 6AC7 or 7V7 tube in the modulator stage. (See wiring diagram on Page 6.)

Take all readings with chassis operating and tuned manually to 1000 kc. or 47 megacycles—no signal.

Use a line voltage of 120 volts or make allowance for the variation.

Use a good high resistance voltmeter having a resistance of at least 1000 ohms per volt.

Take all DC readings on the 500 volt scale, except when an asterisk appears.

Read from indicated terminals to chassis base.

See location chart on Page 2 for position of terminals.

AC voltages are indicated by italics.

VOLTAGE READING AT 120 V. LINE

Type	*Function*	1	2	3	4	5	6	7	8
		0	0	0	—	0.8*	122	*6.2*	272
†† 6AB7	R. F. Amplifier	0	0	0	—	0.8*	114	*6.2*	272
		0	0	0	—	1.8*	101	*6.2*	275
†† 6AC7	Modulator	0	0	0	—	1.8*	112	*6.2*	275
		0	*6.2*	101	101	—	0	0	101
6SA7	Oscillator	0	*6.2*	95	95	—	0	0	95
		0	0	0	—	1.4*	200	*6.2*	266
†† 6AB7	1st I. F. Amp.	0	0	0	—	1.4*	200	*6.2*	266
		0	0	0	—	1.2*	165	*6.2*	263
6AC7	2nd I. F. Amp.	0	0	0	—	1.2*	158	*6.2*	263
		0	0	0	—	3.5*	63	*6.2*	227
6SJ7	1st Limiter	0	0	0	—	0	35	*6.2*	45
		0	0	70	26	70	110	*6.2*	235†
6SJ7	2nd Limiter	0	0	47	45*	47	100	*6.2*	235†
		0	0	—	—	—	—	*6.2*	—
6H6	Discriminator	0	0	—	—	—	—	*6.2*	—
	A. M. Detector	0	—	0	—	0	0.6‡	*6.2*	0
6SQ7	F. M. "Q"	0	—	0	—	0	0.5‡	*6.2*	0
		0	—	1.2*	—	0	113	*6.2*	0
6SQ7	1st Audio Amp.	0	—	1.2*	—	0	113	*6.2*	0
		0	86	—	—	86	1.0*	*6.2*	0
6SC7	Driver and Inverter	0	86	—	—	86	1.0*	*6.2*	0
		0	0	268	276	—	85	*6.2*	16
6L6G	Power Output (2)	0	0	268	276	—	85	*6.2*	16
		—	36.4	—	*365*	—	*365*	—	364
5U4G	Rectifier	—	36.4	—	*365*	—	*365*	—	364
		6.2	50	—	275	20	0		
6U5	Tuning Indicator	*6.2*	50	—	275	20	0		
	F. M. Tuning Ind.	0	0	—	—	0	0	*6.2*	0
6SC7	Amplifier	0	50	—	—	50	0.8*	*6.2*	0
		276	0	0	364		—	343	
—	Speaker Socket	276	0	0	364		—	343	

†† WHERE THE FOLLOWING TUBES ARE USED IN THESE STAGES THE VOLTAGES LISTED APPLY

Tube	*Function*	1	2	3	4	5	6	7	8
		0	270	77	0	0	—	2.8*	*6.2*
7V7	Modulator	0	275	72	0	0	—	2.6*	*6.2*
		0	0	1.5 *	—	1.5*	145	*6.2*	270
6SG7	R. F. Amplifier	0	0	1.6*	—	1.6*	140	*6.2*	260
		0	0	2.0*	—	2.0*	135	*6.2*	260
6SG7	1st I. F. Amp.	0	0	2.0*	—	2.0*	132	*6.2*	260

Upper values are for Broadcast Band.
Lower values are for F. M. Band.

* Use 10 volt scale. All others except AC on 500 volt scale. 1000 ohm per voltmeter used on DC.

† Value is for white dot showing on "Q" switch, with white dot not showing these values change to 100 volts.

‡ Value shown is for white dot showing; white dot not showing, value is zero. Rectifier filament voltage is 4.6 volts.

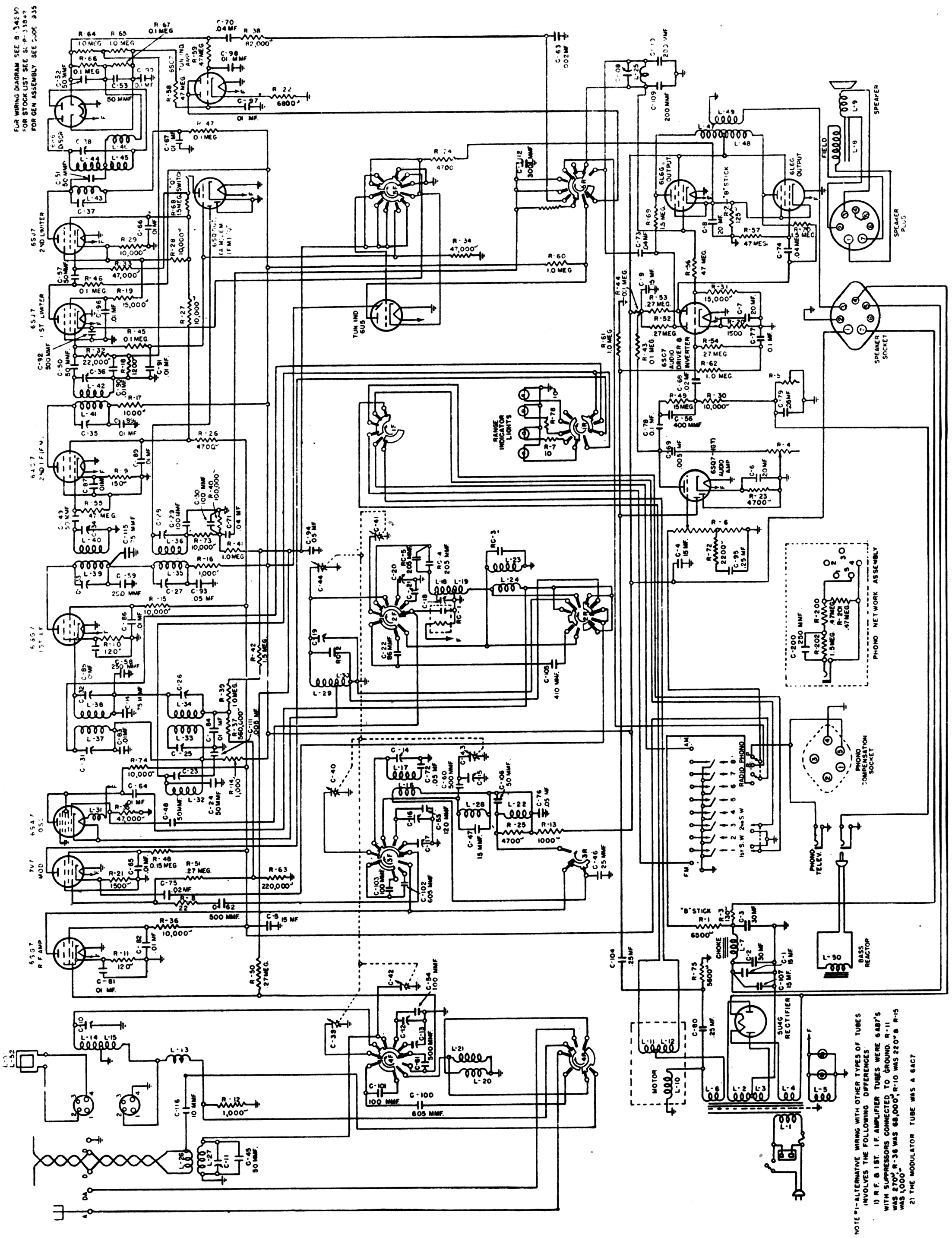

Schematic Circuit

REPLACEMENT PARTS

Capacitors

Piece No.	Circuit Designation	
24314	C-116	10 mmf. Capacitor
24402	C-77, 78, 99	.1 mf. Capacitor
24405	C-70, 71, 73, 74	.04 mf. Capacitor
24994	C-72, 76, 79	.05 mf. Capacitor
25150	C-68, 75	.02 mf. Capacitor
25376	C-58, 59	250 mmf. Capacitor
27101	C-109, 110	200 mmf. Capacitor
27108	C-93, 94	Dual .05 mf. Capacitor
27305	C-45, 48, 49, 50, 51, 57, 106	50 mmf. Capacitor
27999	C-52, 53	50 mmf. Capacitor
28568	C-54	100 mmf.Capacitor
28859	RC-1	Compensator, A Band
29286	C-112	300 mmf. Capacitor
29359	C-114, 115	75 mmf. Capacitor
29371	C-60, 61, 62, 92	500 mmf. Capacitor
29883	C-47	15 mmf. Capacitor
29973	C-90, 95, 104	.25 mf. Capacitor
30322	C-69	.005 mf. Capacitor
30354	C-63	.002 mf. Capacitor
30567	C-19	Aligning Capacitor, 1 Unit
31373	C-56	400 mmf. Capacitor
31377	RC-3	Compensator Short Wave
31467	C-55	120 mmf. Capacitor
31480	C-81, 82, 83, 84, 85, 86, 87, 88, 89, 90, 97, 98	Dual .01 mf. Capacitor
31481	C-64, 65, 66, 67, 91, 96	.01 mf. Capacitor
33524	C-18	Aligning Capacitor, 1 Unit
33560	RC-4, 5	Compensator, A Band
33728	C-39, 40, 41, 42, 43, 44	Variable Capacitor
33736	RC-2	Compensator, F. M. Band
33739	C-1, 107	Electrolytic Capacitor
33754	C-101, 103	100 mmf. Capacitor
33843	C-100, 102	605 mmf. Capacitor
33904	C-105	410 mmf. Capacitor
34050	C-2, 3, 4, 5	Electrolytic Capacitor
34052	C-6, 7, 8, 9	Electrolytic Capacitor
34058	C-22	86 mmf. Capacitor
34059	C-20, 21	Aligning Capacitor, 2 Unit
34060	C-10, 11, 12, 13 —C-14, 15, 16, 17	Aligning Capacitor, 4 Unit

Coils, Transformers and Speakers

30332	L-46	Discriminator Choke
32800	L-31	Heater Choke Coil
33573	L-32	Coil Link
33729	L-37, 38	1st I. F. Transformer, F. M.
33730	L-39, 40	2nd I. F. Transformer, F. M.
33731	L-41, 42	3rd I. F. Transformer, F. M.
33732	L-43, 44, 45	Discriminator, I. F. Transformer, F. M.
33737	L-33, 34	1st I. F. Transformer, A. M.
33738	L-35, 36	2nd I. F. Transformer, A. M.
33742	L-16, 17	R. F. Coil, A Band
33743	L-18, 19	Oscillator Coil, A Band
33744	L-20, 21	Antenna Coil, Short Wave
33745	L-22	R. F. Coil, Short Wave
33746	L-23, 24, 25	Oscillator Coil, Short Wave
33747	L-26, 27	Antenna Coil, F. M.
33748	L-28	R. F. Coil, F. M.
33749	L-29, 30	Oscillator Coil, F. M.
33753	L-1, 2, 3, 4, 5, 6	60 Cycle Power Transformer
33963		Speaker
		Cone for P-33963 Speaker
34053	L-47, 48, 49	Output Transformer
34055	L-7	"B" Choke
34294	L-25	Filter Assembly Low Bass
34510	L-14, 15	Antenna Coil, A Band

Resistors

Piece No.	Circuit Designation	
26345	R-27, 28, 29, 30, 73	10,000 Ohm Resistor
34051	R-1, 2, 3	Voltage Divider Resistor
26333	R-12, 13, 14, 15, 16, 17	1,000 Ohm Resistor
26309	R-7, 78	10 Ohm Resistor
26313	R-8	22 Ohm Resistor
26323	R-9	150 Ohm Resistor
26322	R-10, 11	120 Ohm Resistor
26334	R-18	1,200 Ohm Resistor
26335	R-20, 21	1,500 Ohm Resister
26337	R-72	2,200 Ohm Resistor
26343	R-22	6,800 Ohm Resistor
26341	R-23, 24, 25, 26	4,700 Ohm Resistor
26347	R-31, 19	15,000 Ohm Resistor
26349	R-32	22,000 Ohm Resistor
26353	R-33, 34, 35	47,000 Ohm Resistor
26355	R-36	68,000 Ohm Resistor
26366	R-37	.56 Megohm Resistor
26356	R-38	82,000 Megohm Resistor
26357	R-40, 43, 44, 45, 46, 47, 66, 67	.1 Megohm Resistor
26359	R-48, 49	.15 Megohm Resistor
26362	R-50, 51, 52, 53, 54	.27 Megohm Resistor
26365	R-55, 56, 57, 58, 59	.47 Megohm Resistor
26369	R-61, 62, 39, 64, 65, 71, 41, 60	1 Megohm Resistor
26361	R-63	.22 Megohm Resistor
26371	R-68, 69, 70, 42	1.5 Megohm Resistor
26342	R-75	5,600 Ohm Resistor
33543	R-74	10,000 Ohm Resistor

Controls and Knobs

27628	Felt Washers for Knobs
32130	Drive Cord for Variable Capacitor
32156	Push Button for Stations
33364	Knob
33582	Treble Control
33583	Bass Control
33559	Off-On Switch and Volume Control

Miscellaneous

32047	4-Prong Loop Socket
22973	5-Prong Socket
30151	8-Prong Socket
33248	8-Prong Socket
34544	8-Prong Socket
32048	AC Outlet Socket
31539	Phono Jack
30224	Phono Plug
33218	Power Supply Cord
33370	Range Switch Assembly
32090	Dial Pointer
34057	Dial Glass
33510	Drive Assembly
34068	Eye Cable Assembly
29956	Pilot Lamp
33750	Range Switch
25156	Fuse
27958	Fuse Holder
33943	Binding Post, D-D, DA-A
33505	Binding Post, F. M., A. M.
33325	Dial Escutcheon

Tools and Accessories

AD29	Phillips No. 1 Screwdriver
24608	Aligning Tool
28601	Cabinet Polish
26962	Furniture Touch-up Kit
28303	Headphone Package Assembly